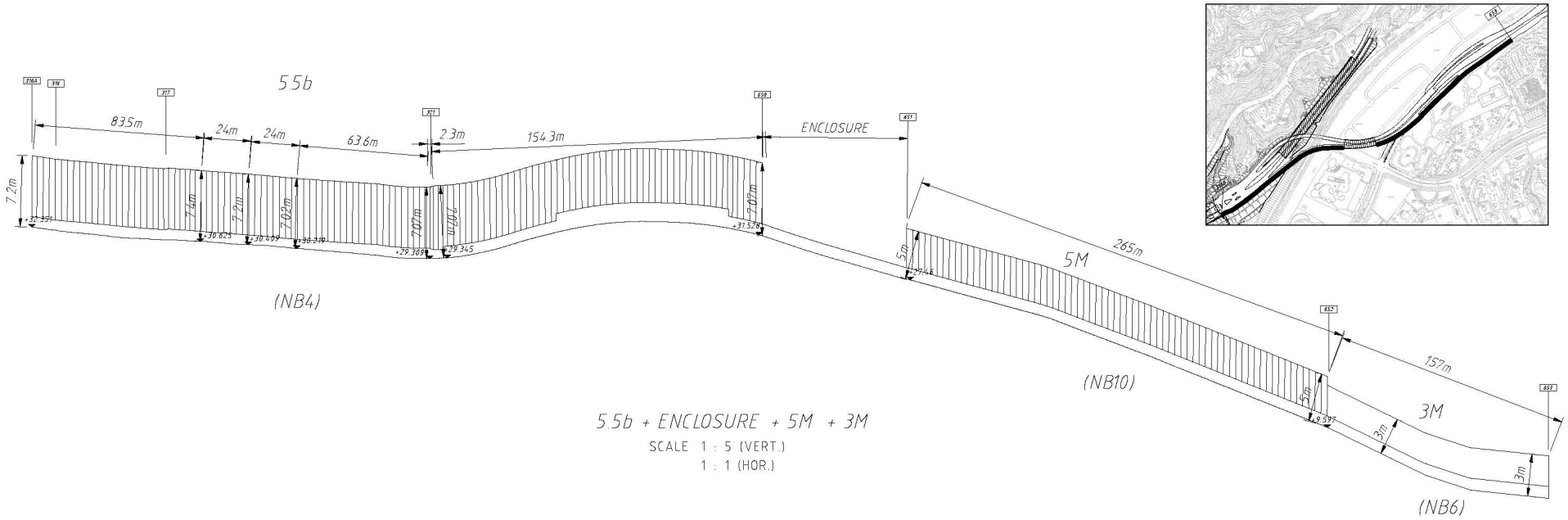

Route 8 - West Kowloon to Shatin - Entrusted Portion
Figure 2.5 – Southbound Slip Road Left Side
(Extracted from the Application VEP-238/2007)

Environmental Permit No.
EP-104/2001/C