# 計劃於新界西貢
# 西貢東郊野公園
# 西灣山
# 安裝
# 電訊發射站

## 工程項目簡介

## 中國移動香港有限公司

由創域工程有限公司制定

(電話 ：2117 9500)

二零零九年八月

目錄


| | 頁數 |
|---|---|
| 1. 基本資料 | 1 |
| 1.1 工程項目名稱 | 1 |
| 1.2 工程項目的用途及性質 | 1 |
| 1.3 工程項目倡議者 | 1 |
| 1.4 工程的位置和規模 | 1 |
| 1.5 指定工程其數目和類型 | 1 |
| 1.6 漁農自然護理署及中國移動香港有限公司之信件 | 2 |
| 1.7 聯繫人姓名和電話號碼 | 2 |
| 2. 規劃和實施規劃之概要 | |
| 2.1 建議工程項目之規劃及執行 | 3 |
| 2.2 項目時間表 | 3 |
| 2.3 與其他計劃或工程項目的關連 | 3 |
| 3. 附近環境的主要元素 | |
| 3.1 噪音 | 4 |
| 3.2 空氣質素 | 4 |
| 3.3 生態 | 4 |
| 3.4 景觀和視覺 | 4 |
| 4. 對環境可能造成的影響 | |
| 4.1 涉及之工程 | 5 |
| 4.2 潛在環境影響-總覽 | 5 |
| 4.3 將採取的環保措施 | |
| 4.3.1 噪音 | 5 |
| 4.3.2 污水，排放物或受污染的徑流 | 5 |
| 4.3.3 產生廢物或副產品 | 6 |
| 4.3.4 礙眼的可見物 | 6 |
| 4.3.5 生態環境 | 6 |
| 4.3.6 會造成污染或危險的意外風險 | 7 |
| 4.3.7 其它 | 7 |
| 5. 較早前批核的同類評估報告 | 8 |
| 6 結論 | 8 |

附件列表

| | |
|---|---|
| 附件一 | 建議工程位置圖 |
| 附件二 | 漁農自然護理署及中國移動香港有限公司之信件<br>(只有英文版本) |
| 附件三 | 工程編制表 |
| 附件四 | 站點標記相片 |
| 附件五 | 中華電力有限公司有關供電設施之提案 (只有英文版本) |
| 附件六 | 電波強弱度計算表 (只有英文版本) |

## 1.0 基本資料

### 1.1 工程項目名稱

在新界，西貢東郊野公園西灣山提出安裝電訊發射站。

### 1.2 工程項目的用途及性質

本工程項目是由中國移動香港有限公司進行(開放予其它流動網絡供應商參與)，旨在爲遠足人士及旅遊人士提供更好覆蓋面的流動電話通訊服務和在危急的情況下確保旅遊人士可以使用通訊服務，因此需要於西貢東郊野公園西灣山上安裝電訊發射站。

### 1.3 工程項目倡議者名稱

中國移動香港有限公司

### 1.4 工程的位置和規模

擬建的電訊發射站將在附件一的位置圖所顯示的新界，西貢東郊野公園西灣山上興建。電訊發射站包括一個設備平台(3.0 米(L) x 3.0 米(W) x 0.8 米(D))共佔 9.0 平方米。設備平台包括一個電訊儀器房和一個 4 米高發射塔，將位於 200.0 mPD 的地平上建造。

另外中華電力有限公司將會擬建一條由擬建有關供電設施至擬建電訊發射站位置的坑道。該坑道之長度約爲 35 米，爲深道爲 0.3 米，用作放置電力管道。

詳細之建議圖則已載於附件一。

### 1.5 指定之工程其數目的類型

只有一種工程包括在這個項目簡介。根據環境評估條例附表 2 第 1 部 Q 項，基於是項工程含有在郊野公園內進行建築工程，並不列入 Q1 項(a) 至 (j) 的例外工程中。因此，任何建議工程開始前必須獲得環境許可。

1.6 漁農自然護理署及中國移動香港有限公司之信件

漁農自然護理署及中國移動香港有限公司之信件已載於附件二。

1.7 聯繫人姓名和電話號碼

是項工程之聯絡人爲莊琨先生(中國移動香港有限公司)，電話號碼 29458441 和傳真號碼 24214962 及林民傑先生(創域工程有限公司)，電話號碼 21179500 和傳真號碼 31038077。

## 2 規劃和實施規劃之概要

### 2.1 建議工程項目之規劃及執行

是項工程是由中國移動香港有限公司規劃及管理，目的在建議地點裝置電訊設備以提供網絡。

在取得地政處批出短期租約及由環保處所發出的許可證後，中國移動香港有限公司將會根據工程編制表展開及完成工程。

同時，是項工程會在展開前將由中國移動香港有限公司交給屋宇署審批。

### 2.2 項目時間表

預期工程，包括安裝天線及電訊設備將預計於 2009 年底動工，並預期於四個月內完工。預計電訊收發站將於 2010 年初投入服務。工程編制表載於附件三。

### 2.3 與其他計劃或工程項目的關連

據知，目前並沒有工程項目在擬建電訊發射站之地點附近。因此，累積的環境影響將不產生。

## 3 附近環境的主要元素

### 3.1 噪音

建議電訊發射站位於偏遠之山區位置，施工地點與最近噪音感應強之地方爲間距超過六百一十米外的西灣山村內的村屋，在施工期間，居住在於村內的居民只會受到十分輕微之噪音影響； 在工程完成後，電訊發射站在操作期間並不會發出噪音，預計居住在於村內的居民將不會受到噪音影響。

### 3.2 空氣質素

在西灣山村距離擬興建之電訊發射站超過六百一十米，位置亦十分空曠，通風情況理想，在施工期間，居住在於村內的居民將不會受到影響，遠足人士在郊野公園內亦只會受到微不足道的影響；在工程完成後，電訊發射站在操作期間並不會對空氣造成污染。

### 3.3 生態

在建議電訊發射站項目工程範圍內，經觀察後發現的植物包括有吊鐘花及在香港常見的野草叢，但沒有發現任何動物或昆蟲在建議項目工程範圍附近生活。

另外，將會把建議電訊發射站範圍內的約 60 棵吊鐘花移植至建議電訊發射站半徑範圍外約 5 米的地方。

建議之位置圖則已載於附件一。

### 3.4 景觀和視覺

主要對視覺敏感地區爲麥理浩徑。爲減低對景觀和視覺影響，中國移動香港有限公司將於 215 米高的小丘頂種植 50 棵新樹苗，以遮蔽擬建電訊發射站之地點。

建議之位置圖則已載於附件一。

## 4 對環境可能造成的影響

### 4.1 涉及之工程

建議發射站工程地台採用鋼筋混凝土，並於場地內澆築混凝土。而發射塔將採用鍍鋅鋼鐵建造，並於場內組裝。

發射站因非大型建築物，其地基會以地台式地基興建。中國移動香港有限公司利用人力及直昇機運送建築材料和設備，但無需建築臨時道路。

挖掘工作將利用小型挖掘機進行，主要是挖掘一個地台式地基不多於 7.0 米(L) x 7.0 米(W) x 0.8 米(D) 深度，挖掘工作在一個月之內將完成。挖掘工作只在展望好天氣才開始。爲減少對附近的影響，挖掘工作進行期間，被挖掘出的泥土會用帆布遮蓋，並會盡快運送至指定堆填區。

### 4.2 潛在環境影響 – 總覽

列出有關電訊發射站對各種環境之潛在影響

- 噪音
- 污水，排放物或受污染的徑流
- 產生廢物或副產品
- 礙眼的可見物
- 生態環境
- 會造成污染或危險的意外風險
- 其他

### 4.3 將採取的環保措施

#### 4.3.1 噪音

建議電訊發射站位置距離對噪音感應強的地點相當遙遠(距離地盤最近對噪音感應蒂是在超過六百一十米外的西灣山村內的村屋)，而且建議項目規模較細，所以預期工程進行期間將只會有十分輕微之噪音影響。在工程完成後，電訊發射站在操作期間並不會發出噪音，預計居住在於村內的居民將不會受到噪音影響。

4.3.2 污水，排放物或受污染的徑流

施工期間，將採取有關措施，以避免未經處理的排放物流入河流。措施根據《建築工地的排水渠》( 專業守則 1/94 ) 指引，設臨時工地排水裝置，以控制工地排出的地面徑流。實際上，這個項目沒有任何主要活動會帶來液體流出物，並且只會需要幾名工作人員。 承辦商禁止設置任何廚房及食堂設施。另外，電訊發射站在操作期間，並沒有污水排出，所以不會造成水源污染問題。

4.3.3 產生廢物或副產品

施工期間，只會產生少量建築及拆卸物料，如木板、機器/設備/物料的包裝等一般廢物。由於大部份的材料是預先制定，在現場安裝，所以只會有少量的廢物而所產生的建築廢物會盡量循環再用，餘下的建築廢料會由工作人員運走。

施工期間僅會產生很少量生活垃圾及化學廢料。這些廢料的處理、貯存及處置將採取正確方法進行，因此，預計對環境不會造成不良影響。

在運作階段，由於電訊發射站是無人操作，所以預期不會產生任何廢物。不過，當進行年度保養，如一般例行保養及除草等，可能會產生小量的廢物。這些皆由進行保養工作的承建商在保養工作完成時予以即時清除。

4.3.4 礙眼的可見物

建議之電訊發射塔座於 200.0 mPD 高山脊上，高度約 4 米。 爲減少對視覺之影響，所有新建之發射塔和接收器的外表將會被塗上' Antique' CB.S. 10B25 或色板號碼 462U 或相似顏色的油漆以配合四周環境。另外，中國移動香港有限公司將於 215 米高的小丘頂種植 50 棵新樹苗，以遮蔽擬建電訊發射站之地點，所以是項工程對景觀和視覺影響相當輕微。

4.3.5 生態環境

爲進一步減少因建造電訊發射站而對生態造成之影響，場所建築邊界和工地面積已經被減到最小。在建議電訊發射站範圍內及電力裝置坑道涉及之挖掘工作，只會影響少量的野草叢生長。亦因附近沒有動物或昆蟲生活，所以不會對牠們造成傷害。中國移動香港有限公司亦將會把建議電訊發射站範圍內的約 60 棵吊鐘花移植至建議電訊發射站半徑範圍外約 5 米的地方。爲避

免對吊鐘花做成破壞，是項移植工程將由專業園藝工程公司進行。

4.3.6 會造成污染或危險的意外風險

操作建議之電訊發射站需嚴格遵守由電訊管理局發出的《工作守則 – 保障工人及公眾免受無線電傳送設備的非電離輻射所危害》。由於建議之地點遠離山徑，因此預期不會對公眾構成影響。

4.3.7 其他

氣味
這項工程預期沒有氣味影響。

擾亂水流及底部沉積物
根據此建議工程性質，預期不會擾亂水流及影響底部沉積物。

氣體排放和灰塵
在施工期間只少量的氣體排放(二氧化硫和氧化氮)從設備中產生。這些氣體將不影響易受空氣影響之人士和地方。由於發射站所佔用的面積比較少和只有小型的挖掘工程，因此所做成的影響是在可接受範圍內。

晚間操作
所有建築工程將在正常之工作時間進行。

引起之交通需求
這項工程僅需利用人力及直昇機搬運作物料輸送，預期並不會對現有道路造成嚴重負荷。

製造, 貯存, 使用, 處理, 運送或危險物料的處理
這項工程將不涉及危險品。

## 5.0 較早前批核的同類評估報告

已就較早前申請「直接申請環境許可證」的申請所呈交的「工程項目簡介」作出參考。

(1) 計劃於元朗大棠山路大棠苗圃安裝電訊發射站。(申請編號 DIR-176/2009)

(2) 計劃於大嶼山石壁山火瞭望台安裝綜合流動電話收發站。(申請編號 DIR-152/2007)

(3) 計劃於大埔大浪坳西貢東郊野公園安裝綜合流動電話收發站。(申請編號 DIR-151/2007)

(4) 計劃於大澳萬丈布南大嶼山郊野公園安裝綜合流動電話收發站。(申請編號 DIR-148/2007)

(5) 計劃於大埔涌背八仙嶺郊野公園安裝綜合流動電話收發站。(申請編號 DIR-144/2006)

(6) 計劃於荃灣大欖郊野公園荃錦管理站台安裝綜合流動電話收發站。(申請編號 DIR-111/2006)

(7) 計劃於西貢東郊野公園元五墳安裝綜合流動電話收發站。(申請編號 DIR-110/2004)

## 6.0 結論

預計電訊發射站興建項目僅帶來輕微的環境影響。透過實施建議的緩解措施，預計不會對環境造成不良的殘留及長遠影響。

由於預計沒有不良影響，加上所建議的緩解措施可以達到《環境影響計估程序的技術備忘錄》的要求。因此，中國移動香港有限公司根據《環境影響評估條例》第 5(11)條，直接申請「環境許可證」。

附件一　　建議工程位置圖

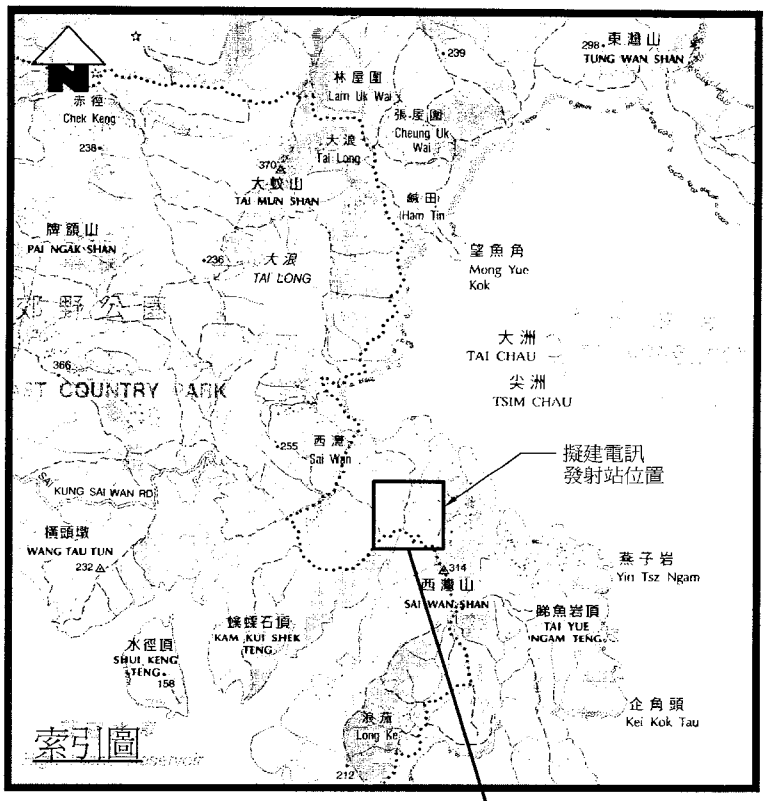


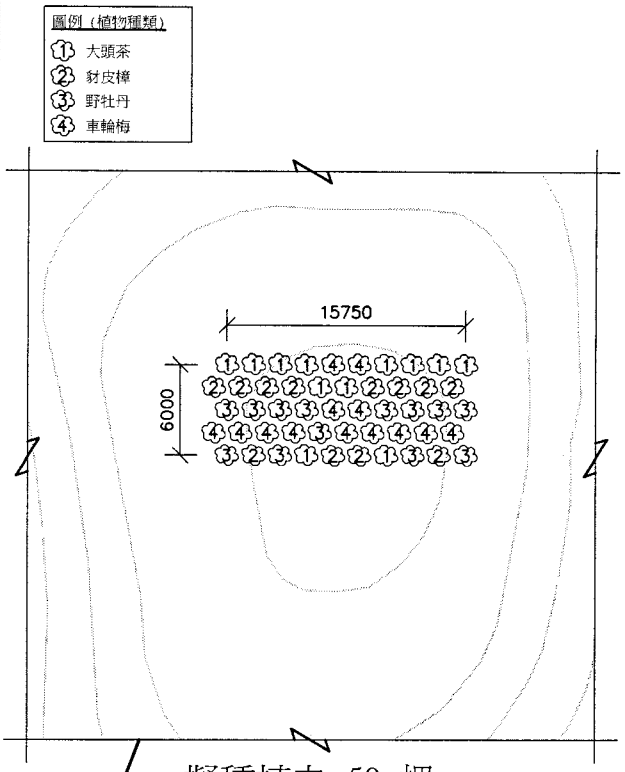


擬種植之 50 棵
屏蔽植物位置圖
1 : 500

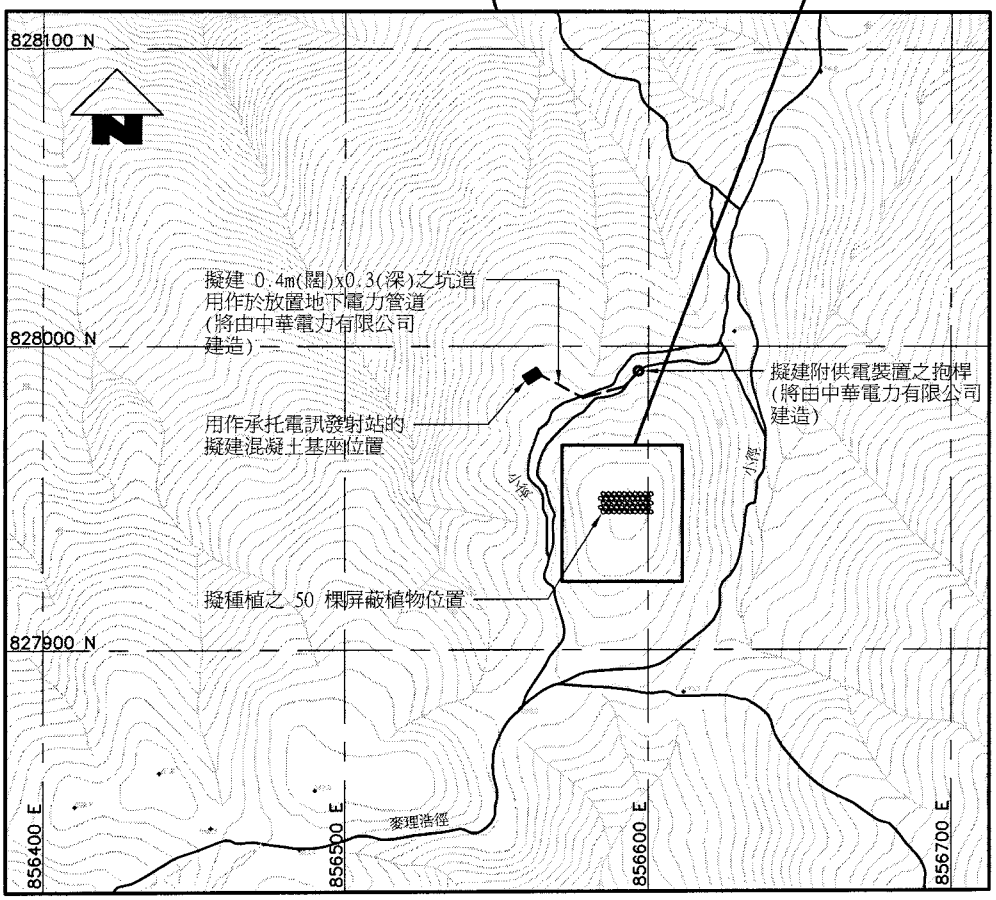


位置圖
1 : 2500

| 項目名稱 : | | 項目編號: | 圖則編號: |
|---|---|---|---|
| 中國移動香港有限公司<br>於西貢東郊野公園-西灣山<br>擬建電訊發射站 | 創域工程有限公司<br>JEG Engineering Co. Ltd. | J8001 | S531-D1 |
| | | 比例:<br>按圖所示 | 日期:<br>08/2009 |

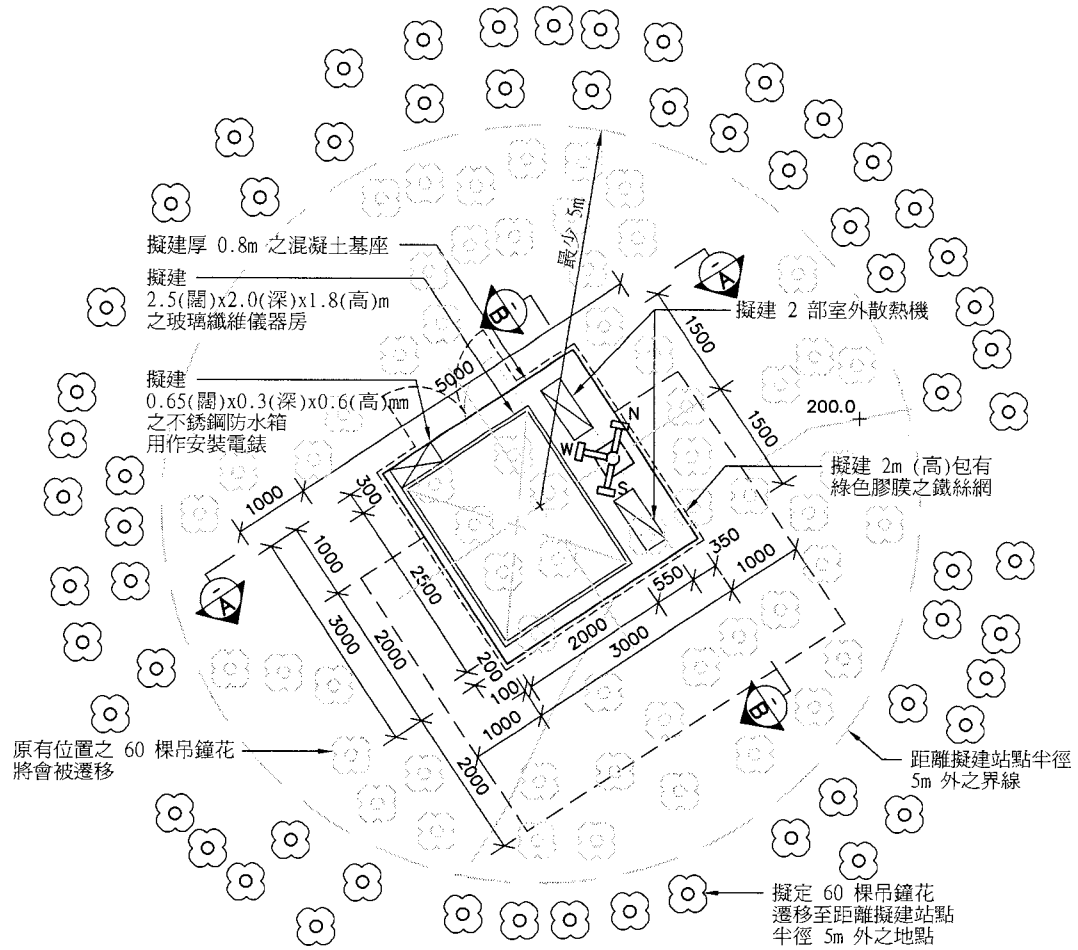


## 儀器房及天線桿位置平面圖

1 : 100

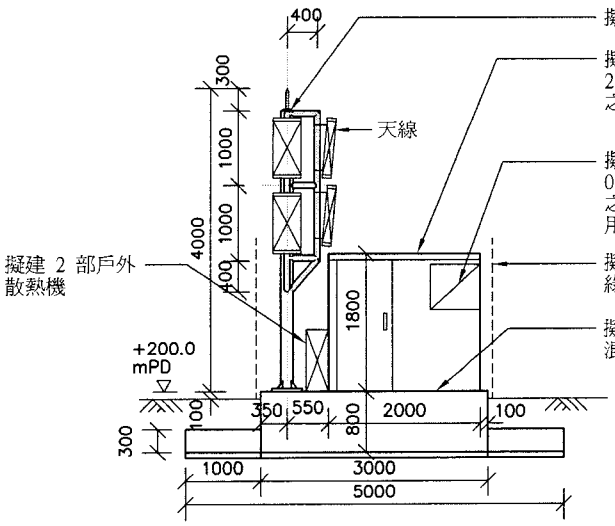


## 切面 A-A

1 : 100

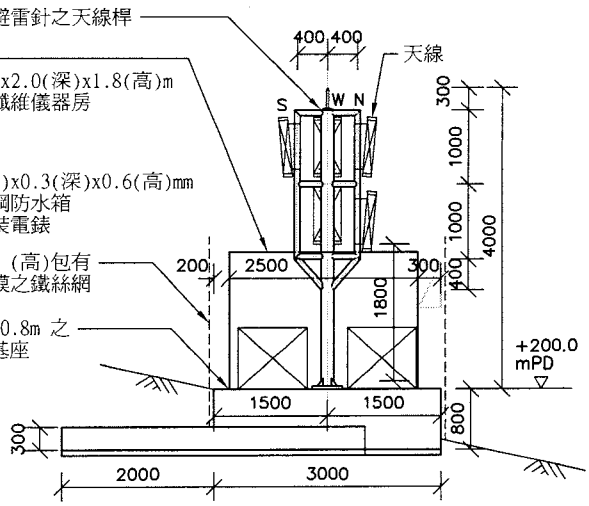


## 切面 B-B

1 : 100

| 項目名稱 : | | 項目編號: | 圖則編號: |
|---|---|---|---|
| 中國移動香港有限公司<br>於西貢東郊野公園-西灣山<br>擬建電訊發射站 | 創域工程有限公司<br>JEG Engineering Co. Ltd. | J8001 | S531-D2 |
| | | 比例:<br>按圖所示 | 日期:<br>08/2009 |

附件二　　漁農自然護理署及中國移動香港有限公司之信件

(只有英文版本)

中国移动通信
CHINA MOBILE

香港新界葵涌葵昌路51號九龍貿易中心1座20樓
Level 20, Tower 1, Kowloon Commerce Centre,
No.51 Kwai Cheong Road,
Kwai Chung, New Territories, Hong Kong
Website: www.hk.chinamobile.com

中國移動香港有限公司
China Mobile Hong Kong Co. Ltd.

Our Ref: PS09168

9 April, 2009

Agriculture, Fisheries and Conservation Department
6/F, Cheung Sha Wan Government Offices,
303 Cheung Sha Wan Road,
Kowloon.

By Fax & Mail
Fax: 2317-0482

Attn: Mr. Dennis Mok – Country Parks Officer

Dear Sir,

**Re: Application for Installation of Radio Base Station at Sai Wan Shan, Sai Kung, New Territories**

Thank you for the meeting dated 13 March 2009 and subsequent site visit with your goodself on 17 March 2009 regarding the captioned subject.

We would like to revise technical proposal and highlight several major points for this Radio Base Station:

Revise technical proposal:

The followings are the revised technical design of Radio Base Station Installation for your consideration:-

1) 1 antenna pole (Height: 4m) for installation of Five (5) Outdoor Antennae will be floor mounted;
2) 1 Fibre Glass Equipment Shelter [Dimension: 2.5m (W) x 2.0m (D) x 1.8m (H)] will be installed;
3) Other accessories: air-conditioners, electrical power source and antenna feeder cables will be connected with our proposed antennae and equipment shelter; and
4) A concrete plinth [Dimension: 3.0m (W) x 3.0m (D) x 0.3m (H)] will be set up for the above installation and the Radio Base Station will be fenced with mesh fencing.

The revised co-ordinates of the four corners of the Radio Base Station (A, B, C & D) are:

A: 856562E, 827993N
B: 856567E, 827993N
C: 856562E, 827988N
D: 856567E, 827988N

Visual Impact

Compared with the proposal we submitted to you on 6 May 2008, we propose to install a 4m(H) antenna pole instead of 5m(H) antenna pole, a smaller equipment Shelter [Dimension: 2.5m (W) x 2.0m (D) x 1.8m (H)], and the Radio Base Station location is

中国移动通信
CHINA MOBILE

slightly relocated. The colour of proposed antenna pole and equipment shelter will be matched with the surrounding environment. Moreover, we propose to plant 50 pieces sapling at hilltop in order to cover our Radio Base Station from lookout points. We are confident that our Radio Base Station would have minimal visual impact on the surrounding.

Protected Species

We will replant "Chinese New Year Flowers" (if any) in our proposed Radio Base Station location to nearby our proposed Radio Base Station location during our installation.

Access and Maintenance Footpath
New access or maintenance footpath will not be constructed for our Radio Base Station.

Enclosed please find the following documents for your approval and comment:
1) Lot Index Plan No.: 8-SE-8D showing our proposed site location;
2) General Layout Plan (Dwg No.: 2367-01 REV. - 2.0);
3) Details of outdoor antenna post and fibre glass shelter (Dwg No. 2367-02 REV. - 2.0);
4) 3 pages of Site Photos; and
5) Specification of proposed equipment (RBS 2216) and antennae (CNBPX303F & Motorola PTP 600)

Grateful if you could comment/approve our application at your earliest convenience. Should you have any queries or wish to have further information, please feel free to contact the undersigned at 2945-8441 or by fax no.: 2421-4962 for further discussion.

Looking forward to your earliest reply.

Yours faithfully,

Samuel Chuang
Implementation Department

Encl.

RW/sc

c.c. OFTA - Mr. Tony W. Y. Yip (Fax: 2180-8588)
Lands Department – Ms. Yvonne W.F. Cheng (Fax: 2792-0706)

# LOT INDEX PLAN

This plan is a copy of the lot index plan showing the approximate location of lot boundaries, including the temporary occupation of land under Government Land Allocations, Temporary Government Land Allocations, Short Term Tenancies and Government Land Licences. The temporary occupation of land may be created or terminated at short notice and should be confirmed with the District Lands Officer. The information shown on this plan MUST be verified by field survey. The lot index plan may be revised without prior notification as better or new boundary evidence becomes available.

本圖則乃地段索引圖的複本，圖示地段界線的大概位置，包括根據政府撥地、臨時政府撥地、短期租約及政府土地租用牌照而臨時佔用土地的位置。臨時佔用土地的情況可迅速短期通知出現或終止，因此應有有關的分區地政專員核實。本圖則所示的資料必須通過實地測量予以核實。當有更佳或新的地界證據時，地段索引圖可能會被修訂而起須事先通知。

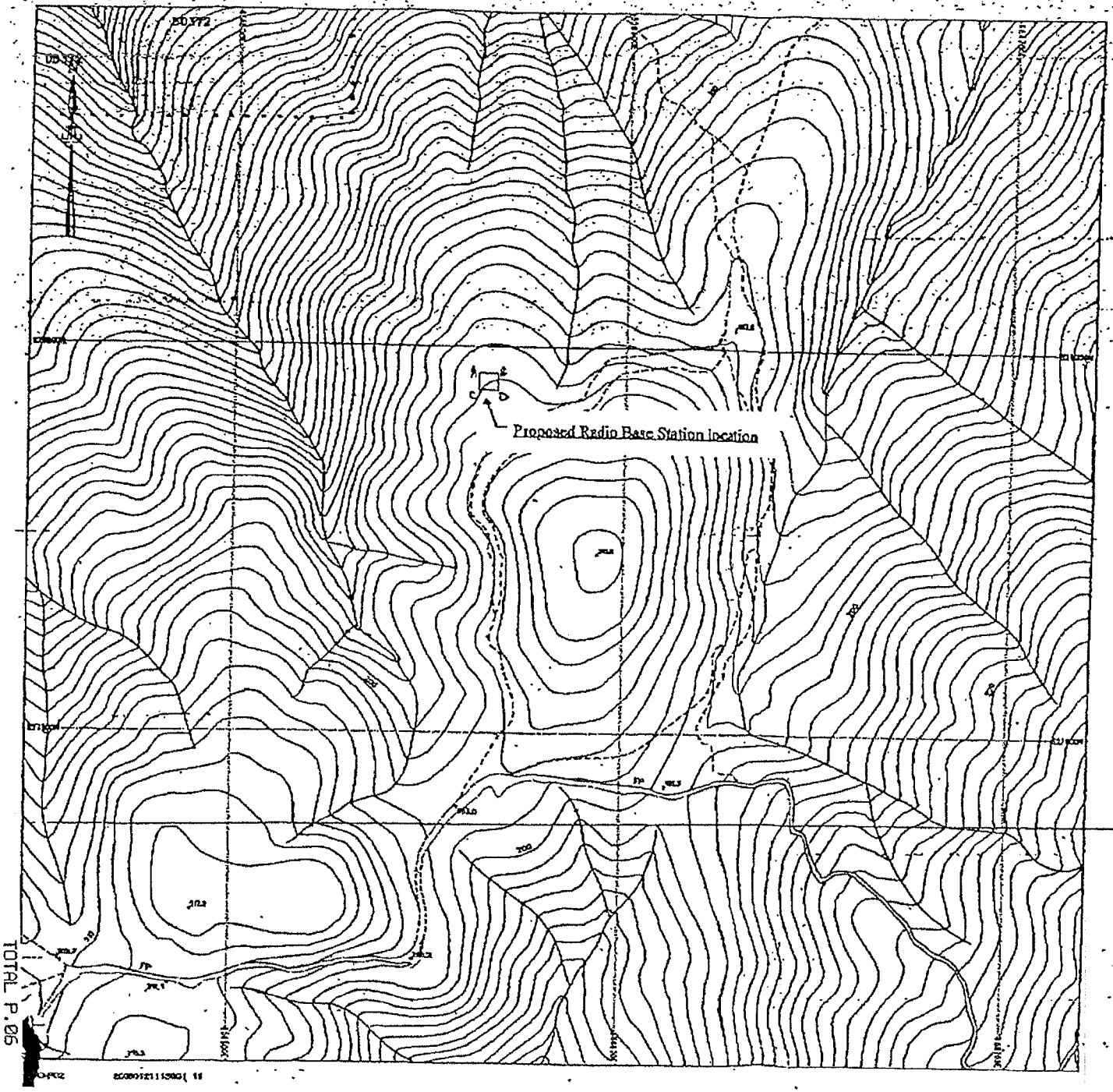


Plan produced by SMO, Lands Department.

© Copyright reserved - Hong Kong Government

SCALE 1 : 1000

METRES 10 0 10 20 30 40 50 METRES

| |
|---|
| Locality : |
| Lot Index Plan No. : 8-SE-8D |
| District Survey Office : Sai Kung |
| Date : 21 Jan 08 |
| Reference No. : |

漁農自然護理署

九龍長沙灣道三零三號
長沙灣政府合署五樓

AGRICULTURE, FISHERIES AND CONSERVATION DEPARTMENT

Cheung Sha Wan Road Government Offices
303 Cheung Sha Wan Road, 5th Floor
Kowloon, Hong Kong

本處檔號 OUR REF: (4) in AF GR CPDA SKE/72/2009
來函檔號 YOUR REF. PS09168
電 話 Tel. No.: 2150 6842
電郵地址 E-mail Address: mailbox@afcd.gov.hk
圖文傳真 Faxline No.: (852) 2311 3731

China Mobile
Level 20, Tower 1
Kowloon Commerce Centre
51 Kwai Cheong Road
Kwai Chung, NT
(Attn: Mr. Samuel Chuang)

23 April 2009

Dear Sir,

**Installation of Radio Base Station**
**at Sai Wan Shan, Sai Kung**

Thank you for your letter of 9 April 2009.

Your proposal follows most of the agreements made in our meeting on 13 March and site meeting on 17 March. Most of the mitigation measures would be stipulated as conditions in the consent given by the Country and Marine Parks Authority. We have the following comment:

(a) Green plastic-coated mesh fencing should be used.

(b) 5 rows of native trees and shrubs at 1m spacing will be planted on the 215m knoll top for screening purpose. A species list is attached for your information.

Please advise us the implementation programme in due course. We would process the application to the Country and Marine Parks Authority after hearing from you.

Yours faithfully,

(Dennis Mok)
for Director of Agriculture, Fisheries and Conservation

c.c. DLO/SK Fax 2792 9896 (Attn. Ms. Yvonne WF Cheng)
D-G of Telecommunications Fax 2180 8588 (Attn. Mr. Tony Yip)

**Species list for screen planting for "Installation of Radio Base Station at Sai Wan Shan"**

| Species | Size | Spacing | Quantity |
|---|---|---|---|
| *Gordonia axillaris* (大頭茶) | seedling | 1m | *10* |
| *Litsea rotundifolia* (豺皮樟) | seedling | 1m | *10* |
| *Melastoma candidum* (野牡丹) | seedling | 1m | *10* |
| *Rhapphiolepis indica* (車輪梅) | seedling | 1m | *10* |
| *Daphniphyllum calycinum* (牛耳楓) | seedling | 1m | *10* |

中国移动通信
CHINA MOBILE

香港新界葵涌葵昌路51號九龍貿易中心1座20樓
Level 20, Tower 1, Kowloon Commerce Centre,
No.51 Kwai Cheong Road,
Kwai Chung, New Territories, Hong Kong
Website: www.hk.chinamobile.com

中國移動香港有限公司
China Mobile Hong Kong Co. Ltd.

Our Ref: ET09606

26 May, 2009

Agriculture, Fisheries and Conservation Department
6/F, Cheung Sha Wan Government Offices,
303 Cheung Sha Wan Road,
Kowloon.

By Fax & Mail
Fax: 2317-0482

Attn: Mr. Dennis Mok – Country Parks Officer

Dear Sir,

**Re: Application for Installation of Radio Base Station at Sai Wan Shan, Sai Kung, New Territories**

Thank you for letter [ref: (4) in AF GR CPDA SKE/72/2009] dated 23 April 2009 regarding the captioned subject.

Please be advised that your comments mentioned in the said letter are noted and observed. Besides, we would carry out the captioned work upon obtaining approvals from relevant government departments such as Lands Department, Environmental Protection Department and Buildings Department. 4 months of installation work will be required, please refer to attached working schedule for details.

Grateful if you could process the application to the Country and Marine Parks Authority and provide the consent to be given by Country and Marine Parks Authority at your earliest convenience.

Should you have any queries or wish to have further information, please feel free to contact the undersigned at 2945-8441 or by fax no.: 2421-4962 for further discussion.

Looking forward to your earliest reply.

Yours faithfully,

Samuel Chuang
Implementation Department

Encl.

RW/sc

c.c. OFTA - Mr. Tony W. Y. Yip (Fax: 2180-8588)
Lands Department – Ms. Yvonne W.F. Cheng (Fax: 2792-0706)

香港政府漁農自然護理署
郊野公園及海岸公園管理局
九龍長沙灣道三零三號
長沙灣政府合署五樓

Country & Marine Parks Authority
Agriculture, Fisheries and Conservation Department
Cheung Sha Wan Government Offices
303 Cheung Sha Wan Road 5th floor
Kowloon, Hong Kong

# MEMO

| | | | |
|---|---|---|---|
| *From* | : Director of Agriculture, Fisheries and Conservation | *To* | : District Lands Officer/Sai Kung (Attn. Ms Yvonne W F Cheng) |
| *Ref.* | : (8) in AF GR CPDA SKE/72/2009 | | |
| *Tel.* | : 2150 6606 | *Your Ref.* | : ( ) in DLO/SK SX3768 |
| *Fax* | : 2311 3731 | *Fax* | : 2972 0706 |
| *Date* | : 4 June 2009 | *Dated* | : |

**Installation of Radio Base Station**
**at Sai Wan Shan, Sai Kung**

I refer to an application dated 9 April 2009 from China mobile Hong Kong Ltd. (copy attached).

2. I have no objection in principle to the proposed installation of radio base station near Sai Wan Shan within the Sai Kung East Country Park as shown on the plan No. 2367-01 and 02 dated 26 February 2008 subject to the conditions attached.

3. Please ensure that the attached conditions are conveyed in full to the applicant when the applicant is informed of the Administration's decision. Please send me a copy of your co-ordinated reply.

4. For enquiries, please contact Mr. Dennis Mok at telephone no. 2150 6842.

(Joseph SHAM)
for Director of Agriculture, Fisheries and Conservation
Country and Marine Parks Authority

Encls.

c.c. DG of OFTA Fax: 2180 8588

Internal
FO/PTC via SFO/SK
RI/SK

Ref. : (8) in AF GR CPDA SKE/72/2009

**Installation of Radio Base Station at Sai Wan Shan, Sai Kung**

Conditions

1. Scale and extent of Works

All works and operations shall be confined to the site area specified in the plans No. 2367-01 and 02 dated 26 February 2008. A copy of the approval given by the Government to the proposed works shall be produced on site when requested by Country and Marine Parks Authority staff.

2. Commencement and Completion of Works

The proposed works shall be completed within 10 months from the date of this letter. The Country and Marine Parks Authority shall be notified in advance of the commencement and completion of works. You are advised to contact Mr. Lee Kwok-hang, Country Park Ranger (Sai Kung) at telephone 2791 5841.

3. Activities Prohibited inside Country Parks

The following are prohibited within country parks unless the specific written agreement of the Country and Marine Parks Authority is given :

(i) making or upgrading of roads, tracks or paths;
(ii) closure or blockage of any road, track or path. The Country and Marine Parks Authority reserves the right to have priority use of any such road, track or path at any time;
(iii) erection of permanent signs, notices or advertisements;
(iv) working on Sundays and Public Holidays;
(v) working between the hours of 6 p.m. and 8 a.m.;
(vi) using of vehicles;
(vii) using fire or stove; and
(viii) felling of trees.

4. Safety inside Country Park

All necessary precautions shall be taken to ensure public safety within country parks; to prevent fires; and to avoid erosion or the slippage or wash of loose materials within or beyond the limits of the site. Appropriate directional and warning signs should be installed and maintained at strategic points as agreed and requested by the Country and Marine Parks Authority. Excavated area shall be properly covered when no work is in progress.

5. Reinstatement

On the completion of the proposed works, or phased completion of part of the proposed works, all site area(s) shall be properly reinstated and landscaped; any erosion and damage to roads, tracks, paths or Country and Marine Parks Authority facilities shall be made good, all at the applicant's expense and without delay and the site(s) shall be left clean and tidy, to the satisfaction of the Country and Marine Parks Authority.

6. Restrictions on Access and Works for Fire Protection and Other Emergencies

The Country and Marine Parks Authority reserves the right to temporarily suspend the works and to impose restrictions on access and development work for fire protection or other emergencies.

7. Validity

Notwithstanding the conditions above, all the proposed works and reinstatement shall be completed by the end of April 2010.

8. Future Maintenance of the Approved Works

The applicant shall be responsible for the future maintenance of all the approved works to the satisfaction of the Country and Marine Parks Authority.

9. Special Conditions

(a) *Enkianthus quinqueflorus* in the 5m radius of the Radio Base Station shall be transplanted to the nearby location before works starts.

(b) The antennae pole and equipment shelter shall be painted in 'Antique' (B.S. 10B25 or Pantone 462U) or similar subdue colour to the satisfaction of the Country and Marine Parks Authority.

(c) Green plastic-coated mesh fencing shall be used for the equipment shelter.

(d) Screening planting with 5 rows of *Gordonia axillaris, Litsea rotundifolia, Melastoma candidum, Rhaphiolepis indica, Daphniphyllum calycinum* shall be undertaken at the 215m knoll top on completion of the Radio Base Station.

Country and Marine Parks Authority
Agriculture, Fisheries and Conservation Department
June 2009

中国移动通信
CHINA MOBILE

香港新界葵涌葵昌路51號九龍貿易中心1座20樓
Level 20, Tower 1, Kowloon Commerce Centre,
No. 51 Kwai Cheong Road,
Kwai Chung, New Territories, Hong Kong
Website: www.hk.chinamobile.com

中國移動香港有限公司
China Mobile Hong Kong Co. Ltd.

Our Ref: ET~~09713~~ 09809

15 June, 2009

Agriculture, Fisheries and Conservation Department
6/F, Cheung Sha Wan Government Offices,
303 Cheung Sha Wan Road,
Kowloon.

By Fax & Mail
Fax: 2317-0482

Attn: Mr. Dennis Mok – Country Parks Officer

Dear Sir,

**Re: Application for Installation of Radio Base Station at Sai Wan Shan, Sai Kung, New Territories**

Reference is made to your memo [ref: (8) in AF GR CPDA SKE/72/2009] dated 6 June 2009 regarding the captioned subject.

Please be advised that your conditions mentioned in the said memo are noted and observed except point 9 (d). Since we could not find Daphniphyllum calycinum, we propose to plant the followings at the 215m knoll top on completion of the Radio Base Station:-

| Species | Size | Quantity |
|---|---|---|
| Gordonia axillaries | seedling | 12 |
| Litsea rotundifolia | seedling | 12 |
| Melastoma candidum | seedling | 13 |
| Rhaphiolepis indica | seedling | 13 |

Attached please find the quotation provided by Chun Hing Landscaping Co. Ltd. dated 9 June 2009 for your reference.

Grateful if you could accept the above suggestion and provide a revised consent to be given by Country and Marine Parks Authority to us at your earliest convenience.

Should you have any queries or wish to have further information, please feel free to contact the undersigned at 2945-8441 or by fax no.: 2421-4962 for further discussion.

中国移动通信
CHINA MOBILE

Looking forward to your earliest reply.

Yours faithfully,

Samuel Chuang
Implementation Department

Encl.

RW/sc

c.c. OFTA - Mr. Tony W. Y. Yip (Fax: 2180-8588)
Lands Department – Ms. Yvonne W.F. Cheng (Fax: 2792-0706)

漁農自然護理署

九龍長沙灣道三零三號
長沙灣政府合署五樓

AGRICULTURE, FISHERIES AND CONSERVATION DEPARTMENT

Cheung Sha Wan Road Government Offices
303 Cheung Sha Wan Road, 5th Floor
Kowloon, Hong Kong

本處檔號 OUR REF: (11) in AF GR CPDA SKE/72/2009
來函檔號 YOUR REF. PS09168
電 話 Tel. No.: 2150 6842
電郵地址 E-mail Address: mailbox@afcd.gov.hk
圖文傳真 Faxline No.: (852) 2311 3731

China Mobile
Level 20, Tower 1
Kowloon Commerce Centre
51 Kwai Cheong Road
Kwai Chung, NT

(Attn: Mr. Samuel Chuang)

19 June 2009

Dear Sir,

**Installation of Radio Base Station**
**at Sai Wan Shan, Sai Kung**

Thank you for your letter of 15 June 2009.

Your proposed amendment of the species mix to be planted is acceptable.

Yours faithfully,

(Dennis Mok)
for Director of Agriculture, Fisheries and Conservation

| | | | |
|---|---|---|---|
| c.c. | DLO/SK | Fax 2792 9896 | (Attn. Ms. Yvonne WF Cheng) |
| | D-G of Telecommunications | Fax 2180 8588 | (Attn. Mr. Tony Yip) |

附件三　　工程編制表

| 於 新界 西貢東郊野公園 西灣山 擬建電訊發射站 | | |
|---|---|---|
| 編號 | 項目名稱 | 預計期限 |
| 1 | 申請批准直接申請環境許可證所提交的工程項目簡介 | 約 45 天 |
| 2 | 直接申請環境許可證 | 約 30 天 |
| 3 | 交給屋宇署審批 | 約 90 至 100 天 |
| 4 | 發出開展工程公告 | 約 7 至 14 天 |
| 5 | 工程施工 | 約 100 至 120 天 |
| 6 | 種植屏蔽植物 | 約 15 至 20 天 |
| 7 | 測試及完備工程 | 約 5 至 10 天 |

標題: 工作編制表

日期: 2009 年 8 月

備註: 本編制表之預計期限會因應審批時間之長短而有所調整

附件四　　站點標記相片

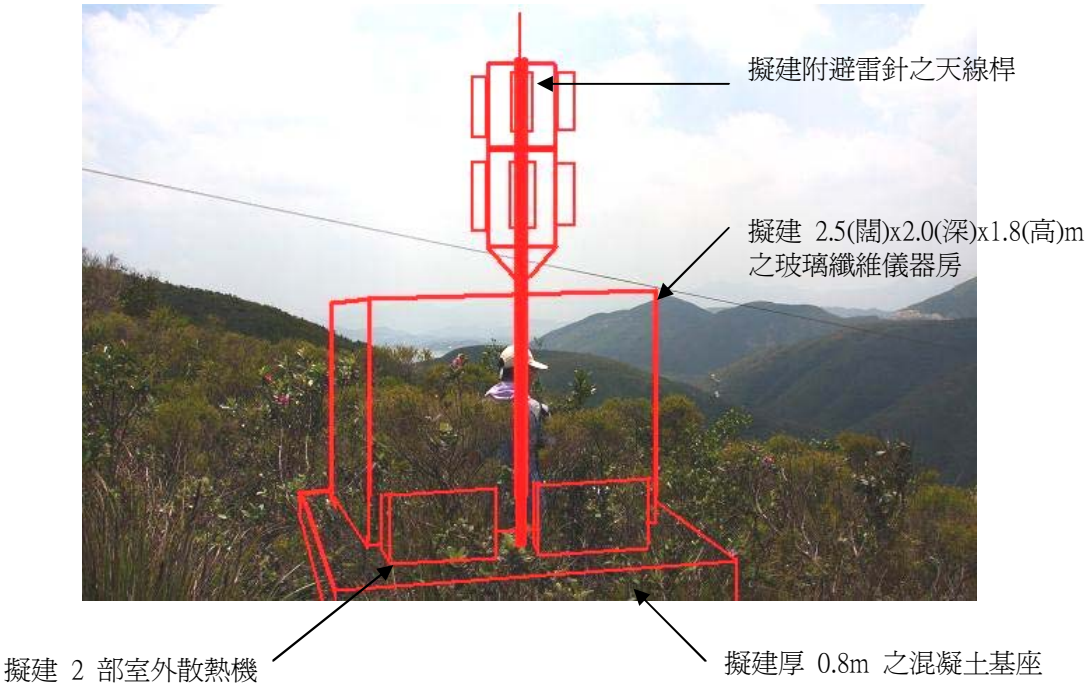


相片 1: 顯示擬建儀器房及天線桿位置

# 附件五　　中華電力有限公司有關供電設施之提案

(只有英文版本)

CLP 中電

中華電力有限公司
CLP Power Hong Kong Limited

東區
East Region

香港九龍慈雲山沙田坳道171號
171 Shatin Pass Road, Tsz Wan Shan
Kowloon, Hong Kong

電話 Tel (852) 2678 1511
傳真 Fax (852) 2678 1468
網址 Website www.clpgroup.com

Date: 27 NOV 2000

China Mobile Peoples Telephone Co Ltd
8/F,Manhattan Centre,
8 Kwai Cheong Road,
Kwai Chung,N.T.

**Our Ref: RE/L3041/08/KLW/KFF/KTL**

Dear Sir,

**Electricity Supply for**
**Telc,Nr SW Line P118,SW Shan County Park,Sai Wan, Sai Kung**
**Order# 2000893104 AC# 82811102925**

Thank you for the above application of electricity supply.

We are pleased to inform you that we shall carry out all necessary work to afford a low voltage three phase four wire 380/220 volt 50 hertz supply subject to our Supply Rules and the following conditions:-

1. That permission be obtained from Government and from owners of any private property concerned for us to carry out the work.

2. All materials provided by us will remain our property and be maintained in good order by this Company.

3. Any reinstatement necessary on your property will be carried out by you at no cost to this Company.

4. You are required to provide and install, at no cost to this Company, a typical stainless steel meter box , a draw-pits and cable ducts as shown on the enclosed drawings Nos. T-GEN-25500-D-E33-0205-01-A , T-GEN-25500-D-E33-01-A , T-GEN-25500-D-E33-0238-01-A and SK2008 /0685/M/P-KTL.

5. Under the Electricity Supply Regulation, you are required to submit the work completion certificate on completion of your work.

To be continued...../2

CLP 中電

**Our Ref: RE/L3041/08/KLW/KFF/KTL**

This condition letter is valid for 3 months from the date of this letter. We look forward to receiving your acceptance of our terms and conditions. To facilitate this, please sign and return the copy of this letter to us as soon as possible before the supply connection is required.

Should you have queries, please contact our Construction Engineer, **Mr. K.K. Siu at 2678 1324 or at pager 7116 3131 a/c 7487. (e-mail address: kksiu@clp.com.hk)**

Yours faithfully,
For and On behalf of
CLP Power Hong Kong Limited

K.L. Wong
Planning & Design Manager
East Region

Encl.: As stated

klw:kff:ktl:sc

c.c. Project scheme SK2008-0685

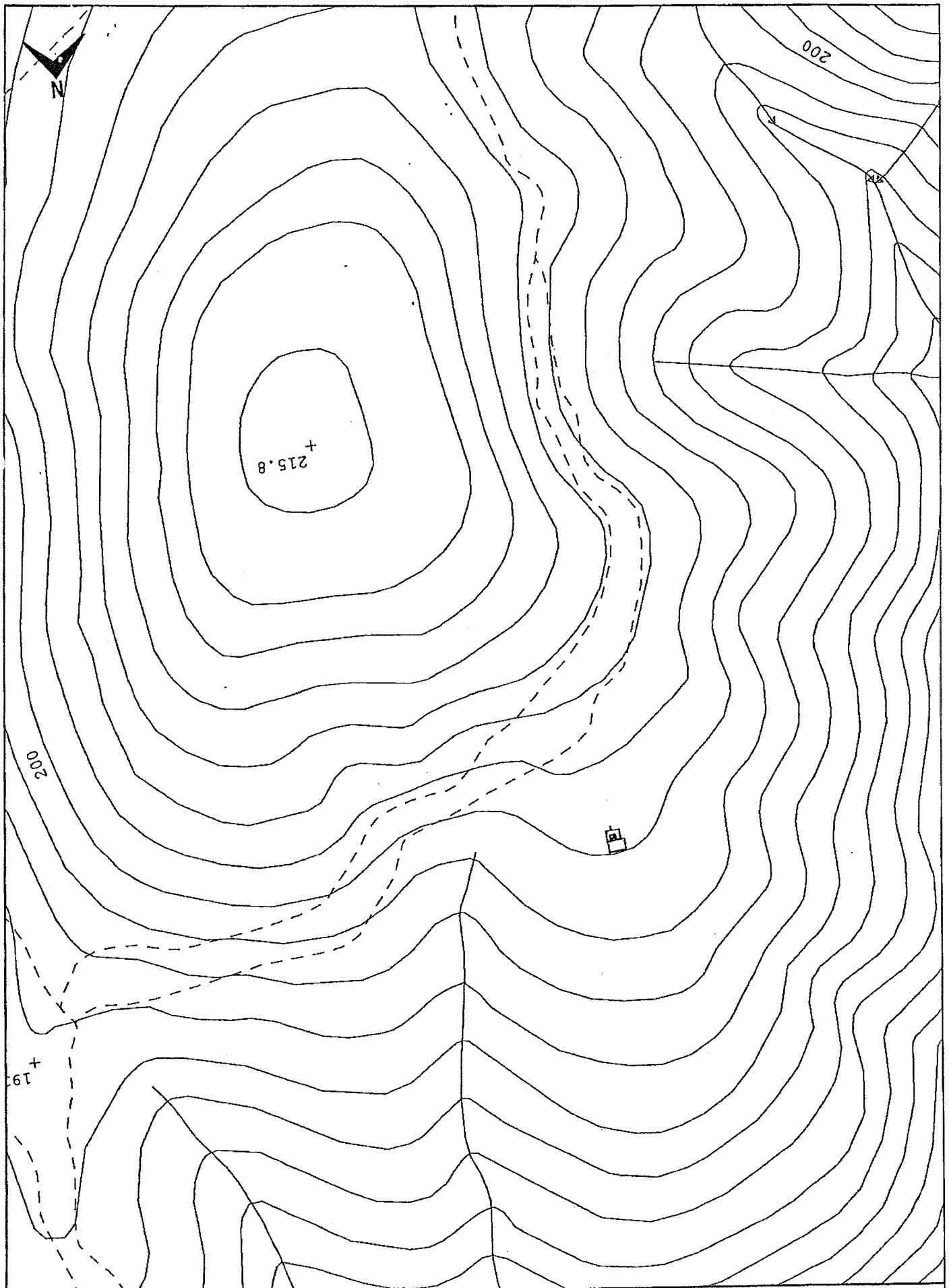


| Scale: 1:500 | Date of print: 21-NOV-2008 | Remarks: ☑ 鐵箱 — 2x150mm Duct |
|---|---|---|
| Map No: 08SE08D | | □ 沙井 600mm X 600mm X 600mm (D) |

Map data reproduced with permission of the Director of Lands. (C) Hong Kong.
Reproduction in any form must be approved by CLP Power.

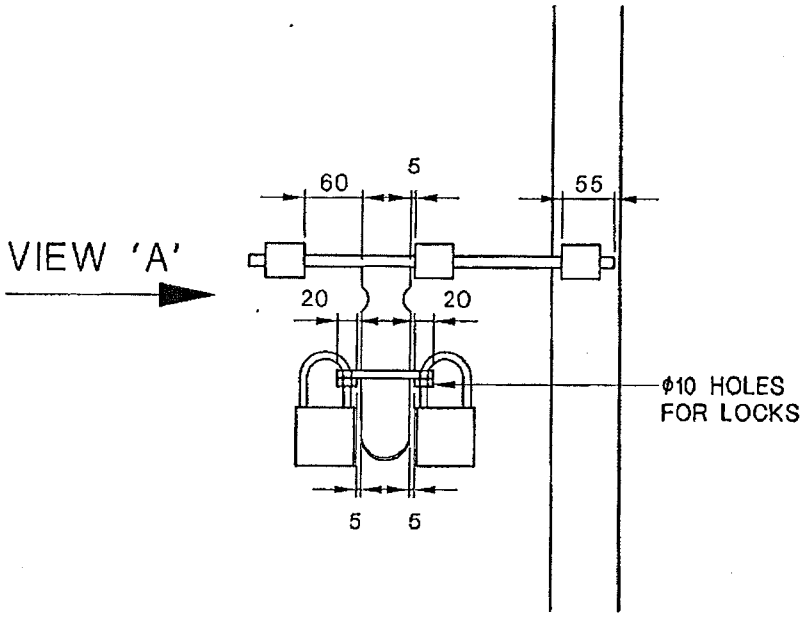


FRONT VIEW

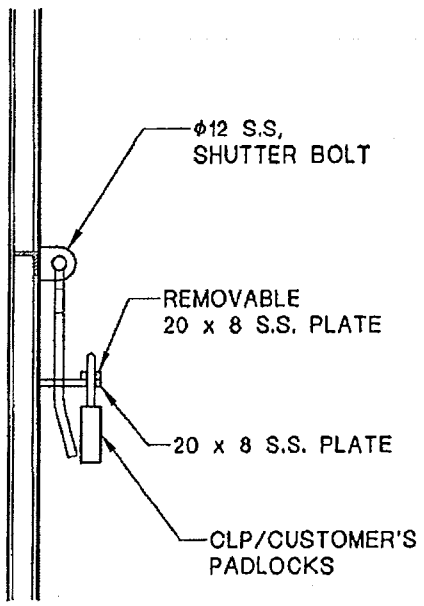


VIEW 'A'

NOTE: ALL DIMENSIONS ARE IN mm.

CLP 中電

| | | | |
|---|---|---|---|
| DRAWN: | C W WONG | DATE: | 30 APR., 2008 |
| CHECKED: | TOMMY HOI | APPROVED: | W B LEE |
| SCALE: | N. T. S. | SHEET(S) IN SET: | 2 |

ASSET MANAGEMENT

| REVS. | A | B | C | D | E | F | G | H | J | K | L |
|---|---|---|---|---|---|---|---|---|---|---|---|
| INITIAL | | | | | | | | | | | |

TITLE :

DUAL LOCKS FOR SINGLE-LEAF DOOR

PROJECT NO. | CONTRACT NO.

DRG. NO. T GEN 25500 D E33 0238 01 - A

ALL RIGHTS RESERVED AND REPRODUCTION IN ANY FORM MUST BE APPROVED BY CLP POWER

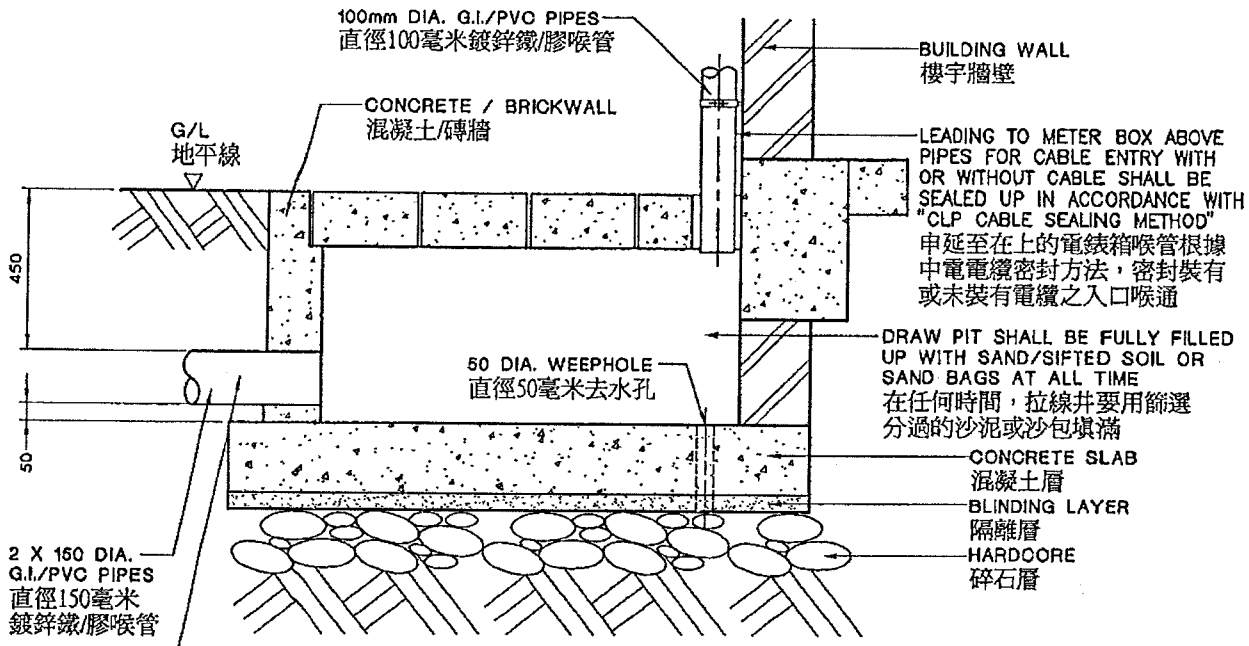


SECTION A - A

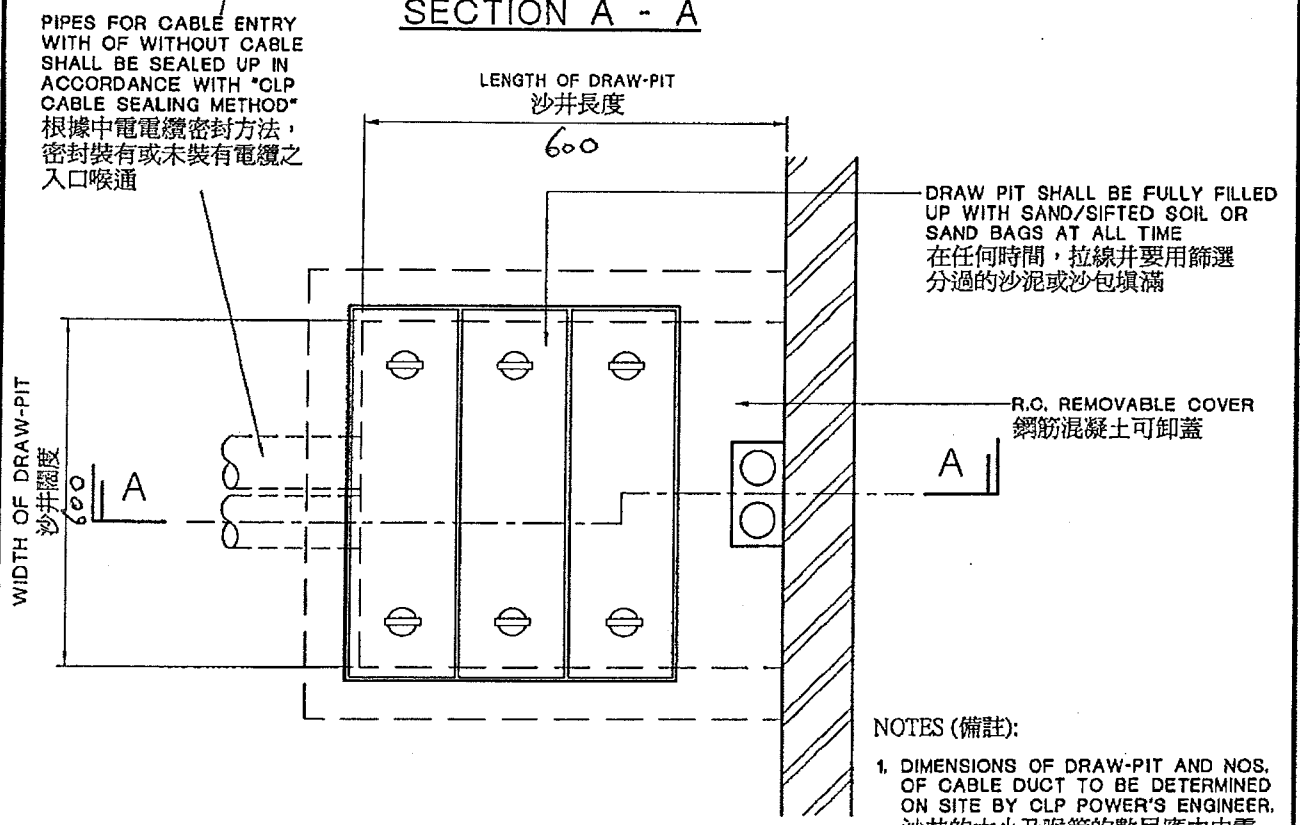


PLAN

NOTES (備註):

1. DIMENSIONS OF DRAW-PIT AND NOS. OF CABLE DUCT TO BE DETERMINED ON SITE BY CLP POWER'S ENGINEER.
沙井的大小及喉管的數目應由中電工程師決定。
2. ALL DIMENSIONS ARE IN mm.
標註單位爲毫米。

CLP 中電

| REVS. | A | B | C | D | E | F | G | H | J | K | L |
|---|---|---|---|---|---|---|---|---|---|---|---|
| INITIAL | | | | | | | | | | | |

TITLE TYPICAL DETAIL OF 1-WAY CABLE DRAW-PIT FOR VILLAGE HOUSES (STRAIGHT)
村屋單向電纜沙井的標準詳圖(直視圖)

| | | | |
|---|---|---|---|
| DRAWN: | C W WONG | DATE: | 17 MAR., 2008 |
| CHECKED: | TOMMY HOI | APPROVED: | W B LEE |
| SCALE: | 1 : 20 | SHEET(S) IN SET: | 1 |

PROJECT NO. CONTRACT NO.

ASSET MANAGEMENT

DRG. NO. T GEN 25500 D E33 0213 01 - A

ALL RIGHTS RESERVED AND REPRODUCTION IN ANY FORM MUST BE APPROVED BY CLP POWER

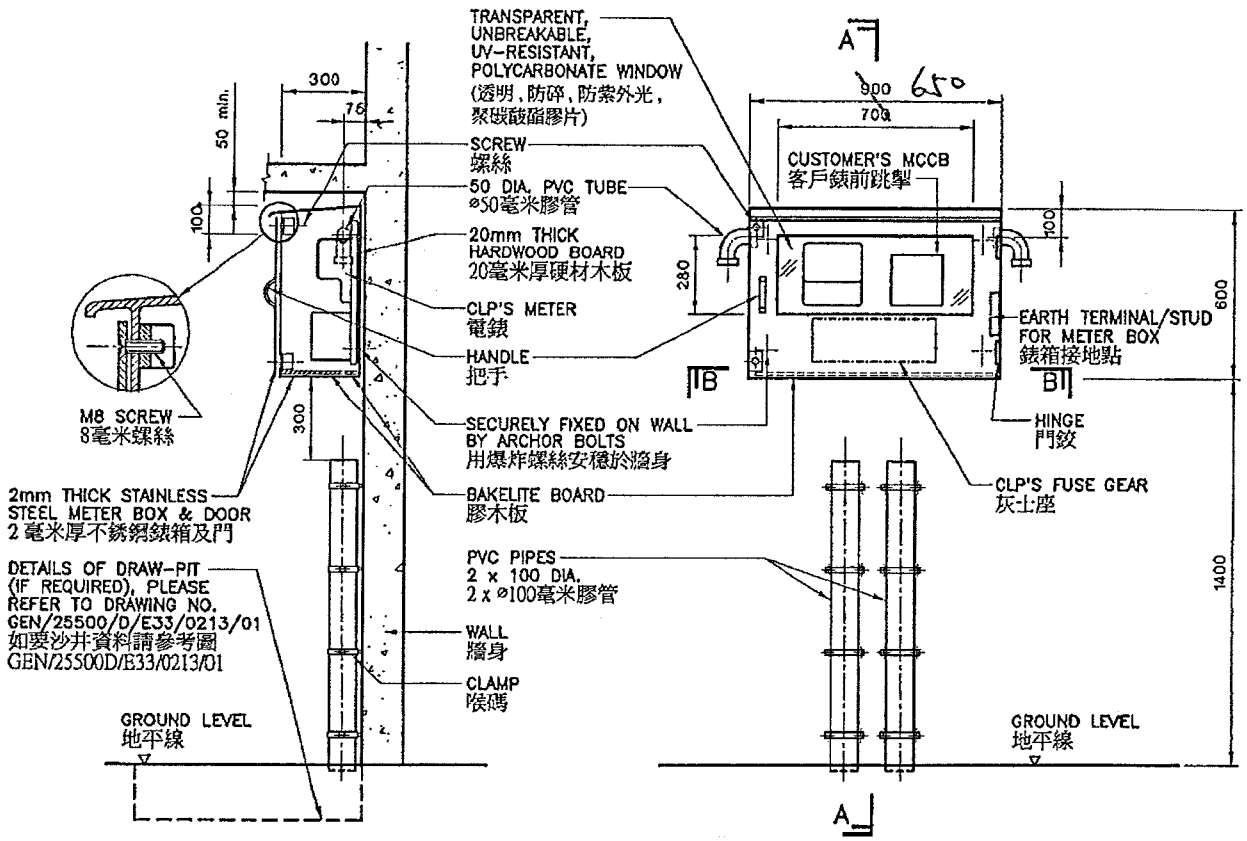


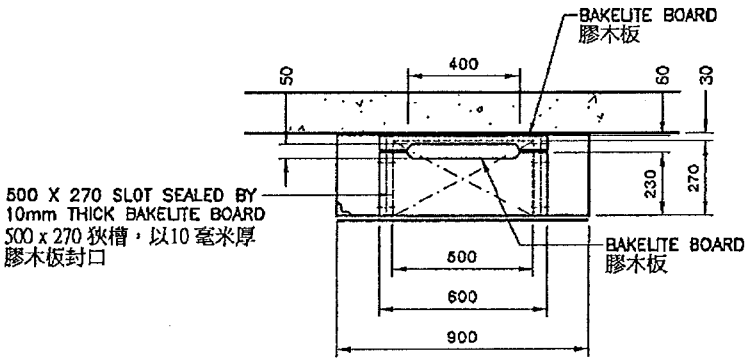


NOTES (備註)：

1. ALL DIMENSIONS ARE IN mm.
   標註單位爲毫米。

| | | | |
|---|---|---|---|
| CLP 中電 | REVS. | A B C D E F G H J K L | |
| | INITIAL | | |
| | TITLE : TYPICAL WEATHER-PROOF STAINLESS STEEL METER BOX 標準防水不銹鋼錶箱 - 60/100 A 1 x 三相 或 3 x 三相 | | |
| DRAWN: C W WONG | DATE: 17 MAR., 2008 | | |
| CHECKED: TOMMY HOI | APPROVED: K K LEUNG | | |
| SCALE: 1 : 25 | SHEET(S) IN SET: 1 | PROJECT NO. | CONTRACT NO. |
| ASSET MANAGEMENT | | DRG. NO. T GEN 25500 D E33 0205 01 - A | |

ALL RIGHTS RESERVED AND REPRODUCTION IN ANY FORM MUST BE APPROVED BY CLP POWER

# 附件六　　電波強弱度計算表

(只有英文版本)

# Calculation of Plane Wave Power Density at CP-Sai Wan Shan Site 2367a

$$S = \frac{RGP}{4\pi r^2} w/m^2 \qquad Sn(r, \theta) = \frac{S(r, \theta)\, r_n}{r} w/m^2$$

中国移动通信 CHINA MOBILE

S - Plane Wave Power Density ( Far - Field ); Sn - Plane Wave Power Density ( Near - Field )
R - Radiation Pattern( Normalised to unity in the direction of maximum radiation)
G - Antenna Gain
P - Antenna input power
r - Distance from the observation point to the antenna.
d - Distance from antenna to the cut over point
$r_n$ - Rayleigh Distance ( $ha^2 / 2\lambda$ )

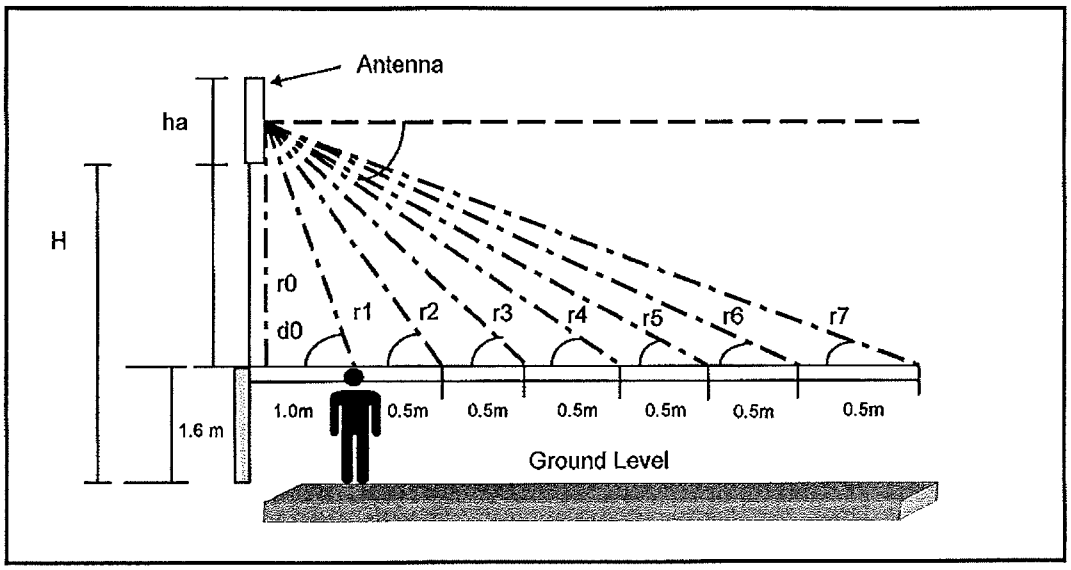


*Ant / Sector Name :-* S1

*Antenna Specification :-*

Ant. Type = CNBPX303F
Ant.Length = 0.86 m

*Antenna Configuration :-*

D/t = 4 °(α)
G = 9.82 dBd = 9.594
P = 9.51 W
H = 1.7 m
ha = 0.86 m
$r_n$ = 2.25 m

| *Loss :* | *dB* |
|---|---|
| Cable loss | 1.52 |
| Jumper cable | 0.4 |
| Triplexer | 0.3 |
| Splitter | 0 |
| Total | 2.22 |

| *dx (m)* | $r^2(m^2)$ | r(m) | α−ϕ (°) | Attu.(dB) (Ref Pattern) | Rx | *S(W/m²)* | *Sn(W/m²)* |
|---|---|---|---|---|---|---|---|
| 0.0 | 2.89 | 1.70 | -94 | -45.0 | 0.00003 | 0.0000794 | 0.00010538 |
| 1.0 | 3.89 | 1.97 | -63 | -24.1 | 0.00389 | 0.0072614 | 0.00830174 |
| 1.5 | 5.14 | 2.27 | -52 | -28.3 | 0.00148 | 0.0020893 | 0.00207802 |
| 2.0 | 6.89 | 2.62 | -44 | -30.2 | 0.00095 | 0.0010064 | 0.00086450 |
| 2.5 | 9.14 | 3.02 | -38 | -24.4 | 0.00363 | 0.0028842 | 0.00215117 |
| 3.0 | 11.89 | 3.45 | -33 | -19.8 | 0.01047 | 0.0063942 | 0.00418139 |
| 3.5 | 15.14 | 3.89 | -29 | -19.0 | 0.01259 | 0.0060373 | 0.00349869 |
| 4.0 | 18.89 | 4.35 | -27 | -20.2 | 0.00955 | 0.0036706 | 0.00190435 |
| 4.5 | 23.14 | 4.81 | -24 | -23.3 | 0.00468 | 0.0014676 | 0.00068794 |
| 5.0 | 27.89 | 5.28 | -22 | -23.8 | 0.00417 | 0.0010852 | 0.00046336 |

***Refer to the "IRPA Guidine on Limits of Exposure to Radiofrequency", the general public exposure limits is 9.226 - 9.275 W/m² for our 1845.2 - 1855.0 MHz system.***