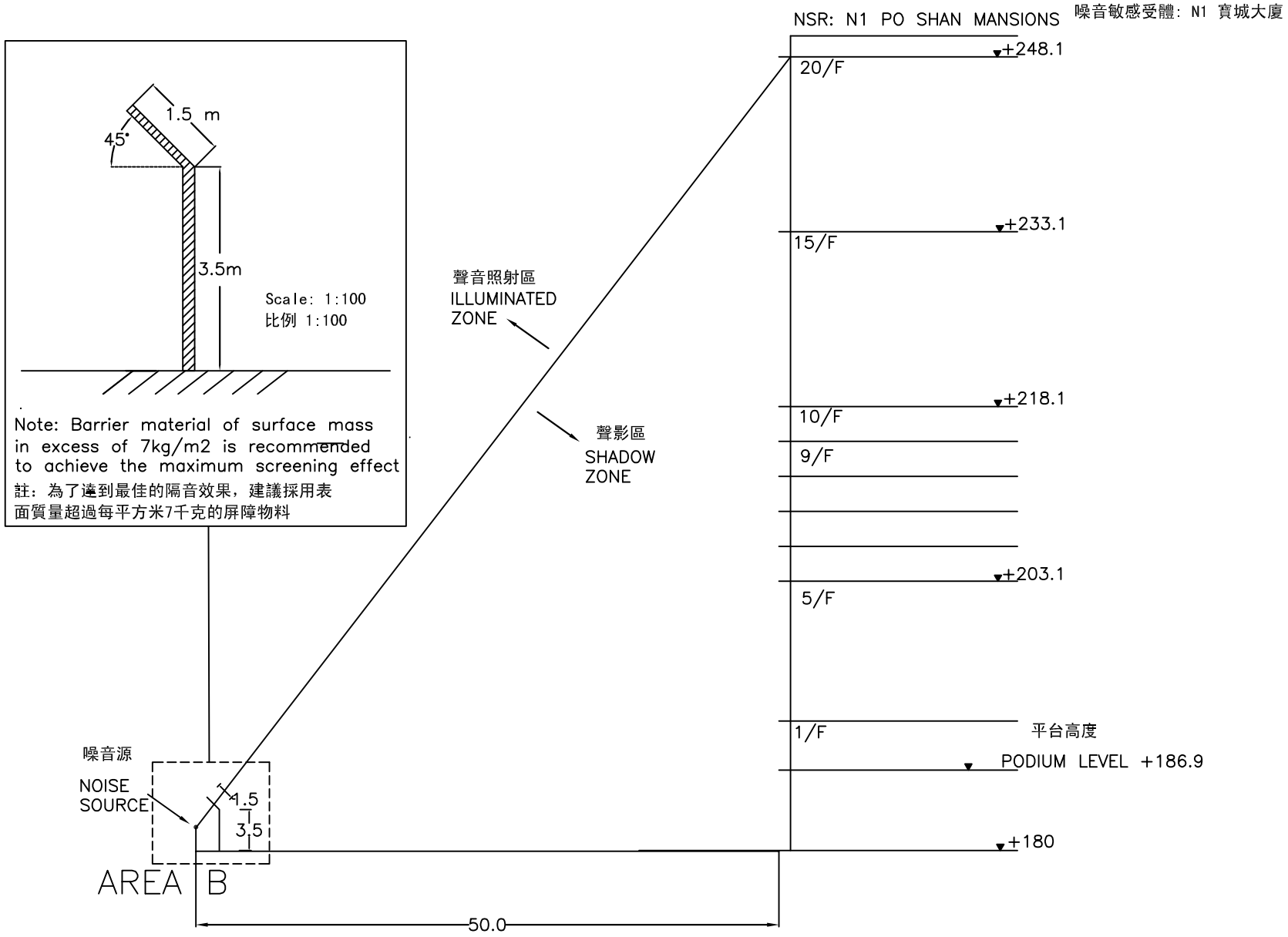

MAUNSELL | AECOM

Maunsell Environmental Management Consultants Ltd

LANDSLIDE PREVENTIVE WORKS AT PO SHAN, MID-LEVELS- NATURAL TERRAIN RISK MITIGATION WORKS
半山寶珊地段防止山泥傾瀉工程-天然山坡滑坡災害緩減工程

TYPICAL SECTION OF MOVABLE NOISE BARRIER

流動隔音屏障的切面圖

(SHEET 2 OF 2)

SCALE	1:500	DATE	MAY 07
CHECK	MCTY	DRAWN	YPK
JOB No.	60017196(2.1)	DRAWING No. 5.2	REV –

P:/60017196/001/REPORTS/EIA/FIGURE/FIG5.2(SECTION2)