工程項目簡介
PROJECT PROFILE

Harvest Investment Holdings Limited
太豐實業有限公司

Harvest Biodiesel Plant Development
太豐生物柴油廠發展項目

Project Profile
工程項目簡介

September 2010
二〇一〇年 九月

Environmental Resources Management
香港環境資源管理顧問有限公司
21/F Lincoln House
Taikoo Place 979 King's Road
Island East Hong Kong
香港英皇道九七九號
太古坊林肯大廈二十一樓
Telephone 電話 2271 3000
Facsimile 傳真 2723 5660

www.erm.com

Delivering sustainable solutions in a more competitive world

PROJECT PROFILE

Harvest Investment Holdings Limited

Harvest Biodiesel Plant Development

September 2010

Reference 0109889

For and on behalf of
ERM-Hong Kong, Limited

Approved by: Frank Wan

Signed: _____

Position: Partner

Date: 16 September 2010

CONTENTS

1 BASIC INFORMATION

1.1 PROJECT TITLE

Harvest Biodiesel Plant Development (the Project)

1.2 NAME OF PROJECT PROPONENT

Harvest Investment Holdings Limited

1.3 NAME AND TELEPHONE NUMBERS OF CONTACT PERSON

Dr Harrison Geng, Vice President, Harvest Investment Holdings Limited

Tel: 2802 4288

1.4 PURPOSE AND NATURE OF THE PROJECT

The Project will involve the construction and operation of a 150,000 tonnes per annum (tpa) (or about 500 tonnes per day) (all production capacities indicated are maximum design production capacities to be reached progressively) biodiesel plant. The facility will be designed as a multi-feedstock system capable of processing a mixture of waste cooking oil (WCO) and refined palm oil (RBD PO) or other vegetable oils to produce biodiesel and glycerine. The capacity of glycerine production is estimated to be up to 15,000 tpa (about 50 tonnes per day).

The Project will also include facilities for treating crude vegetable oils into refined vegetable oils, with by-products that can be used as feedstock for biodiesel production. The vegetable oil refining plant will have the capacity of producing refined vegetable oils up to 75,000 tpa (or about 250 tonnes per day).

With the capability of utilising WCO as feedstock for biodiesel production, the Project will offer an outlet for the disposal of WCO in Hong Kong and the conversion of waste to a green fuel.

As indicated in the consultation document recently published by the Environment Bureau of the HKSAR Government on *Hong Kong's Climate Change Strategy and Action Agenda*, the use of biodiesel is one of the measures in the Government's standing policy for reducing greenhouse gas (GHG) emissions. In line with this policy, the Project will produce biodiesel for sale in the local market, thereby making positive contributions to enhance the availability of biodiesel in Hong Kong and GHG emission reduction.

1.5 *LOCATION OF PROJECT AND HISTORY OF THE SITE*

Subject to the award of tenancy through a tendering process to be conducted by the Environmental Protection Department (EPD) in end 2010/early 2011, the Project is intended to be located in a leased land lot within EcoPark Phase II in Area 38, Tuen Mun, New Territories with a total area of around 25,000m^2 (the Site). The Project will also utilise the existing marine frontage for loading and unloading of feedstock, reagents, biodiesel and diesel to be transported by barges. *Figure 1.1* presents the proposed location of the Project with the above spatial requirements taken into account. The exact location and configuration of the Site are subject to refinement based on the outcome of the EcoPark Phase II tenancy tender.

The site identified for the Project was formed from reclamation specifically for the EcoPark development and has not been used for any other purposes.

1.6 *DESIGNATED PROJECTS TO BE COVERED BY THE PROJECT PROFILE*

The Project will qualify as a Designated Project (DP) under the *Environmental Impact Assessment Ordinance* (EIAO) with respect to the following items:

- Item G.4 (b), Part I, Schedule 2 – a waste disposal facility or activity for industrial wastes [(1)];
- Item K.6, Part I, Schedule 2 – a chemical or biochemical plant in which substances are processed and produced, with a storage capacity exceeding 500 tonnes;
- Item K.13, Part I, Schedule 2 – a dangerous goods godown with a storage capacity exceeding 500 tonnes; and
- Item L.4, Part I, Schedule 2 – a storage, transfer, and trans-shipment of oil facility with a storage capacity of not less than 1,000 tonnes.

(1) Apart from the WCO from restaurants, the Project may also use the WCO from industrial scale food processing/production as feedstock for its biodiesel production.

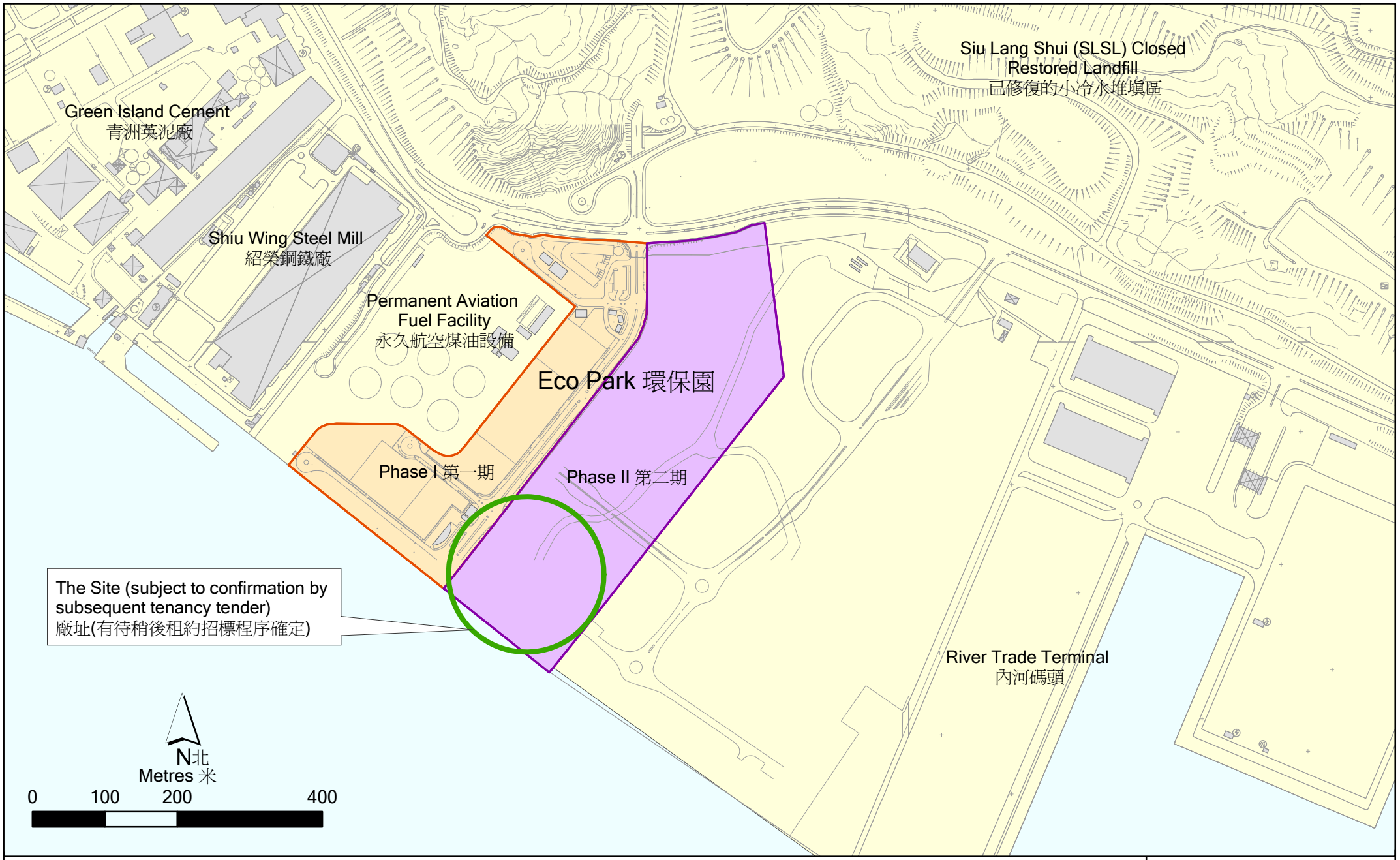

Figure 1.1
圖 1.1

Proposed Site Location (Indicative) of Harvest Biodiesel Plant Development
太豐生物柴油廠擬建廠址示意圖

File: 0109889_site.mxd
Date: 15/09/2010

Environmental
Resources
Management

ERM

2 PROJECT INFORMATION

2.1 OVERVIEW

Biodiesel is a diesel fuel substitute produced from renewable sources such as vegetable oils and WCO. Animal fats and grease trap wastes may also be used as feedstock in some other biodiesel plants. This Project, however, will only utilise feedstock of vegetable origin. Chemically, biodiesel is defined as the mono alkyl esters of fatty acids (fatty acid methyl esters, or FAME in short) and is typically produced through the reaction of triglycerides in the feedstock, which are esters of fatty acids with glycerine, with methanol or ethanol in the presence of a base catalyst to produce glycerine and biodiesel (or FAME). The reaction is termed "transesterification"

Biodiesel is a clear liquid at room temperature and its colour depends on the feedstock. Biodiesel can be used alone or mixed in any ratio with diesel fuel of fossil origin for use in diesel engines. Biodiesel has physical and chemical properties with regard to the operation of diesel engines similar to those of diesel of fossil origin. With respect to the quality of biodiesel, the most commonly referenced standards include EN 14214 and ASTM D6751-08. The Project will produce biodiesel meeting these standards.

Biodiesel is gaining recognition in many countries as an alternative fuel, which may be utilised without any modifications to the vehicle engine when it is used as a blend with diesel of fossil origin. In the European Union (EU), United States and many other countries (eg Brazil, Indonesia, Malaysia), there are mandatory requirements for the blending of biodiesel in diesel fuel for sale.

Contrary to fossil fuels such as diesel, biodiesel is a type of renewable energy source that potentially has no or very low net CO_2 emissions with its biological origin. Biodiesel is now widely produced and used throughout EU, US and many other countries and it has gained worldwide popularity as an alternate energy source.

2.2 PROJECT DESCRIPTION

The Project will comprise three broad groups of facilities:

- the biodiesel and glycerine plant (BGP);
- the vegetable oil refining plant (VORP); and
- the auxiliary plant system and tank farm.

The manufacturing processes or operations within each of the above groups of facilities are described in more details in the following sections.

2.2.1 *Biodiesel and Glycerine Plant*

The BGP will be designed as a multi-feedstock system capable of processing a mixture of WCO and RBD PO or other vegetable oils. Biodiesel and glycerine are produced through a proprietary patented transesterification process, namely the "CD Process", which was originally developed by Oelmühle Leer Connemann GmbH. Biodiesel plants with capacities ranging from 65,000 tpa to 200,000 tpa adopting the CD Process have been successfully completed and operated in a number of European countries. Proven technologies and experience with respect to the type and scale of production processes involved in the Project are therefore available.

The main reaction in the CD Process involves the tranesterification of triglycerides in vegetable oils or WCO with methanol. Sodium methylate is used as the catalyst in the process. The reaction is presented in *Figure 2.1*.

Figure 2.1 Transesterification in CD Process

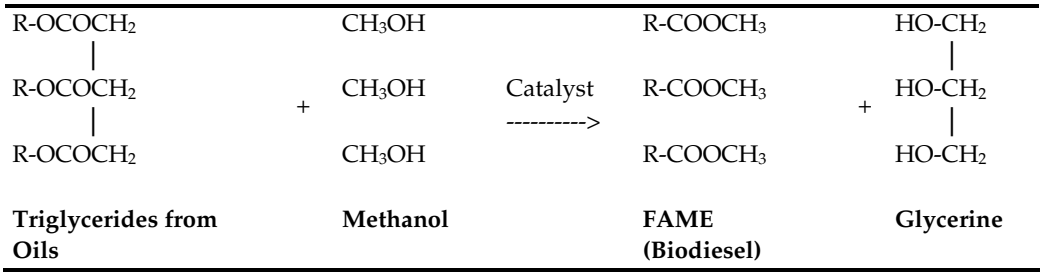

In addition to the transesterification process a side reaction also occurs, wherein triglycerides in vegetable oils or WCO react with sodium hydroxide to produce biodiesel and glycerine. *Figure 2.2* presents the side reaction.

Figure 2.2 Side Reaction

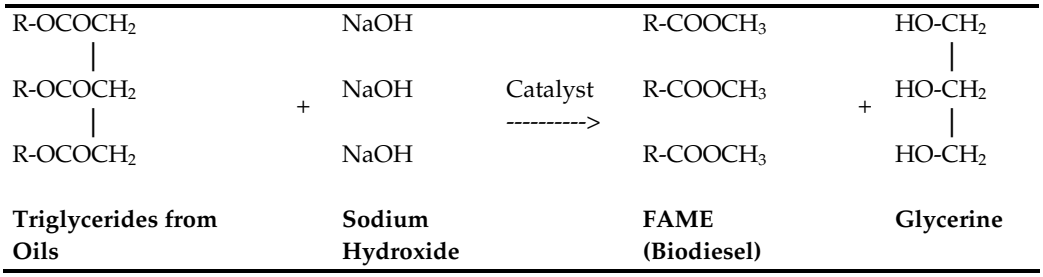

The production processes in the BGP can be broadly divided into the following stages:

- Pre-treatment;
- Transesterification;
- Methanol recovery and glycerine water pre-treatment;
- Glycerine water evaporation; and
- Glycerine distillation.

Figure 2.3 presents a schematic of the BGP. A brief description of each of the production stages is also provided below.

Pre-treatment

The first step in the production of biodiesel and glycerine involves the removal of undesirable substances such as phospholipids, lecithins, gums, sterol glycosides in the feedstock, which could influence the quality and free flow of the resulting biodiesel by degumming. Degumming of oil is achieved through hydration in the presence of phosphoric acid at an elevated temperature. Water, gums, and soap are then separated from the oil by a centrifugal separator. Water from the centrifugal separator is discharged to the spent water section and the gums and soap to the on-site wastewater treatment plant. The degummed oil is vacuum dried to remove remaining moisture.

Transesterification

Transesterification is the second step and involves alcoholysis of the degummed vegetable oil by methanol, using sodium methylate as a catalyst.

The output from transesterification column comprises two phases, namely a heavy phase and a light phase. The heavy phase is a mixture of water, glycerine, soaps, and traces of biodiesel, while the light phase is biodiesel.

The heavy phase is dried and washed to recover the biodiesel, while the light phase is directed to the tank farm for storage. The residue from washing and drying of the heavy phase is passed through a series of separators to recover the glycerine water.

Methanol Recovery and Glycerine Water Pre-treatment

The methanol recovery and glycerine water pre-treatment is the first step in recovery and processing of glycerine. The washed and dried residue is dosed with acid (to maintain pH) and directed to the fatty acid separator for recovery of fatty acids. The remaining methanol and water are separated from fatty acids by steam stripping. The resultant fatty acids, free from methanol and water, are sold as an additive for pesticides and/or feedstock for crude ester.

The methanol/glycerine water from the fatty acid separator is recovered in the fractionating column. Pure methanol is recovered as the condensate and pumped into the methanol tanks for storage and reuse in the transesterification process, while glycerine water collected in the sump of the fractionating column is directed to the glycerine evaporation section.

Glycerine Water Evaporation

Crude glycerine is recovered as the condensate in the glycerine water evaporator and is further processed by distillation.

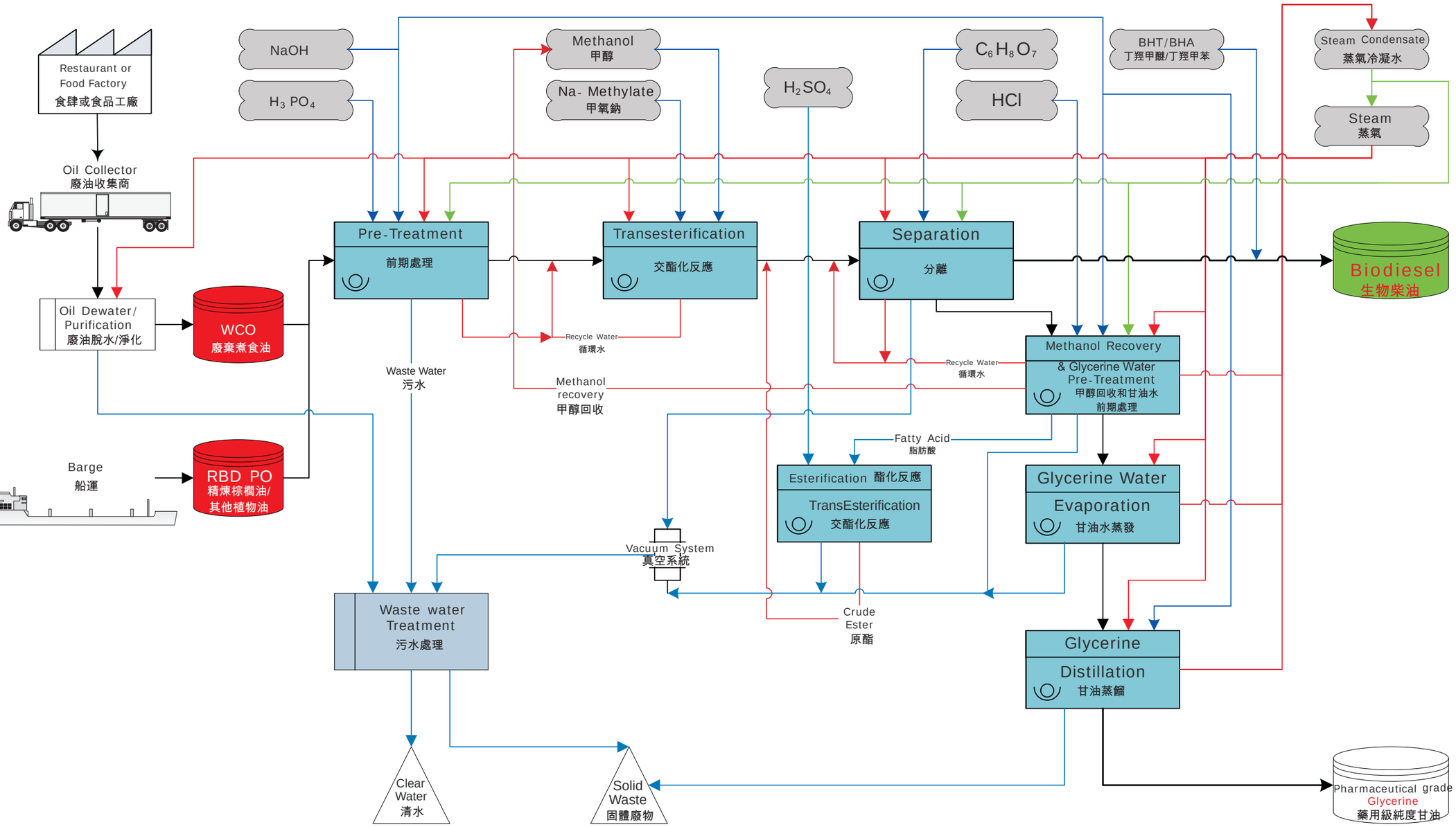

Figure 2.3
圖 2.3

Indicative Schematics of Biodiesel Production Process
生物柴油生產工序示意圖

FILE: 0109889b
DATE: 15\09\2010

Environmental Resources Management
ERM

Glycerine Distillation

The crude glycerine from the glycerine water evaporator contains about 80% of glycerine and about 20% of impurities. Distillation allows removal of the impurities and the recovery of pharmaceutical grade glycerine. Activated carbon will be used in this process. The spent activated carbon will be collected by the supplier for regeneration. The glycerine collected at the end of the distillation process is directed to the tank farm for storage.

2.2.2 *Vegetable Oil Refining Plant*

The VORP will also be designed as a multi-feedstock system and is capable of processing various crude vegetable oils such as soybean oil, rapeseed oil, palm oil, and sunflower seed oil. The refining of vegetable oil involves removal of gums, colour and odour, and non-cold resistant stearines.

The main production stages of the VORP are as follows:

- Pre-treatment by degumming, partial neutralisation or chemical neutralisation – removes gums in crude vegetable oil through hydration in the presence of a mineral acid (phosphoric acid) at an elevated temperature;
- Bleaching/filtration – removes colour by treatment with silica gel, activated carbon and bleaching earth, followed by filtration;
- Deacidification and deodorisation – removes free fatty acids, ketones, aldehydes etc from the oil by distillation (deacidification); and
- Winterisation – removes waxes from vegetable oil.

Figure 2.4 presents a schematic of the VORP. A brief description of each of its production stages is provided below.

Pre-treatment

Pre-treatment by degumming is the first step in refining of vegetable oil. The degumming of vegetable oil is similar to as that for the BGP and is achieved by hydration, ie addition of water, in the presence of phosphoric acid at an elevated temperature.

Bleaching / Filtration

Bleaching and filtration of oil are carried out to remove colour from naturally present lipochromes such as carotene, chlorophyll, and gossypol, natural colouring substance formed by the deterioration of oils during processing and storage, and metal derivatives. Oil is bleached with silica gel, activated carbon and bleaching earth in vacuum. After the bleaching step, the oil/silica gel/ activated carbon/ bleaching earth mixture is passed through a series of filters to separate the oil from impurities and to polish the oil. The residue from the filtration process is further treated with steam to extract any

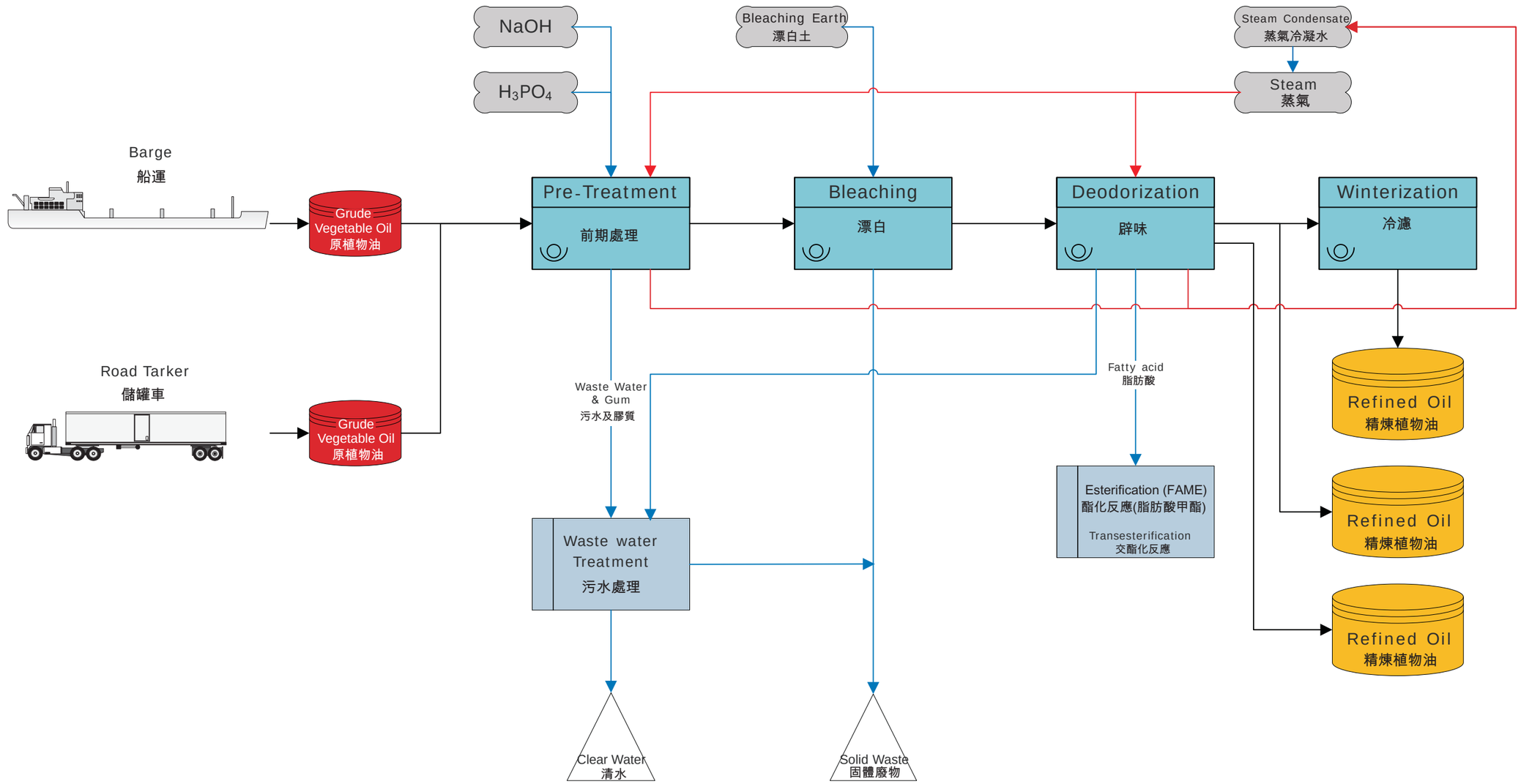

Figure 2.4
圖 2.4

Indicative Schematics of Vegetable Oil Refining
植物油精煉工序示意圖

FILE: 0109889c
DATE: 15\09\2010

Environmental Resources Management
ERM

remaining oil. The spent silica gel/activated carbon/bleaching earth will be collected by the supplier for regeneration.

Winterisation

Winterisation is the removal of waxes from vegetable oil. The presence of these waxes with higher melting points results in turbidity of the oil at temperatures below 10˚C. The winterisation process involves cooling the oil to allow solidification of waxes with higher melting points and filtration to separate the waxes from the oil. The oil after winterisation is directed to the tank farm for storage. The waxes will be transported offsite and utilised as feedstock in other industrial processes.

2.2.3 *Auxiliary Plant System and Tank Farm*

Auxiliary Plant System

Auxiliary plant systems include a nitrogen blanketing system, exhaust gas treatment system, gas detection and warning system, wastewater treatment plant, diesel blending plant, heat recovery system, uninterruptible power supply, steam generator, compressed air generation system and cooling water system.

The nitrogen blanket system allows creation of a nitrogen blanket around all plant units, tanks, and other equipment that are located in a methanol atmosphere. The nitrogen displaces air, hence oxygen, inside such equipment, thereby preventing formation of an explosive atmosphere. In addition, special gas detectors are installed in the vicinity of equipment that is located in a methanol atmosphere. These detectors are placed at a height of about 20 cm above floor level to measure the methanol concentration in air. If the methanol concentration exceeds a predetermined threshold value, the alarm will be triggered.

The exhaust gas treatment system consists of a wash column filled with a structured packing. This system restricts the quantity of methanol emitted to the atmosphere.

The wastewater treatment plant will treat process effluents by dissolved air flotation (DAF) and anaerobic digestion to remove pollutants such as fatty acids prior to discharge. The biogas generated from the anaerobic digestion will be flared and the sludge generated (about 400 kg per day) will be dewatered and disposed of to landfill or other facilities designated by the EPD.

As the biodiesel produced is intended mainly for local consumption without blending or as blends with diesel of fossil origin, blending will be undertaken on site.

All plant process units are equipped with integrated heat recovery systems with efficiencies of over 80%.

The uninterruptible power supply supports the functioning of the plant computer system (ie operating system server, operating system clients, and plant bus) and plant safety equipment (such as gas monitoring system and emergency stops) for a period of approximately 10 to 15 minutes to enable safe shutdown of plant and equipment in the event of mains power outage.

The process steam generator provides process steam for the facilities in the Project. The boilers will be biodiesel/diesel-fired. The compressed air generating system produces compressed air to produce clean and dry instrument air for the measuring and control system. Cooling required for the manufacturing processes is achieved through a closed-loop cooling water system.

Tank Farm

The tank farm of the Project will be divided into the following sections for the storage of materials required or produced at different stages of the production process:

- tanks used for the storage of feedstock;
- tanks for storing intermediate products (such as pre-treated oils, crude glycerine water, refined sunflower seed oil), by-products (such as gums, fatty acid distillates, and yellow glycerine), and special materials (such as sodium methylate); and
- tanks for storing the final products (such as biodiesel, distilled pharmaceutical grade glycerine, and refined vegetable oil).

The tank farm will be bunded to contain spillage, if any. The bunds will have the capacity to contain the contents of the largest tank in the bund.

2.2.4 *Site Personnel*

It is currently envisaged that a total operational staff of about 70 will be employed for the operation of the Project. The operational staff will work in shifts and there will be up to 60 staff on site at any one time.

2.2.5 *Transportation of Feedstock, Reagents and Products*

It is currently envisaged that the feedstock and reagents for the production process will be delivered to the Site by 2,500t barges and on land by 30t road tankers. Based on the current estimates, the delivery traffic will comprise about three to four barges per week and up to about 30 truck trips per day.

The products and wastes from the Project will be transported offsite using barges or road vehicles. It is currently estimated that about three barges per week or up to about 40 truck trips per day will be generated for the transportation of products and wastes.

2.2.6 *Construction of the Project*

Metal hoardings will be erected to fence off the Site prior to the commencement of foundation construction. The plant will most likely be supported on pile caps founded on piles socketted into bedrock. Piled foundation will also be used for the buildings. The exact detailed design of the foundation will be further investigated as the design of the Project progresses. Piling works will only be carried out during the daytime.

The reinforced concrete buildings will be constructed with ready-mix concrete by commonly adopted construction methods. In addition, the perimeter bund walls for the process and tank farm areas will be constructed of reinforced concrete.

The pipes and gantries will be supported by structural steelworks, which will be pre-fabricated and assembled on site. The prefabricated structural steel works and storage tanks will be assembled and erected on site by hydraulic and tower cranes.

The installation of equipment will commence upon the completion of civil works. Subject to approvals from relevant authorities, installation works may be carried out on a 24 hours per day and seven days per week basis.

As paved marine frontage with vertical seawall has already been constructed as part the EcoPark development, there is no need for a jetty to be constructed for the Project.

Considerations on green and sustainable buildings will be incorporated as appropriate in the Project.

2.2.7 *Outline Project Planning and Implementation Programme*

The Project Proponent will be appointing specialist process designer and suppliers for the design of the production process and the procurement of associated equipment. Parsons Brinckerhoff (Asia) Ltd has also been appointed as the consultant responsible for the overall design and delivery of the Project. The contractors for the construction of the Project are yet to be determined through the subsequent procurement process.

The development programme currently envisaged for the Project is outlined in *Table 2.1*:

Table 2.1 Tentative Project Development Programme

Activity	Indicative Date
Conceptual design	August 2010 to November 2010
Engineering design and contract procurement	December 2010 to June 2011
Commencement of the construction of the Project	June 2011
Commencement of testing and checkout	July 2012
Commencement of operation of the Project	September 2012

3 POTENTIAL ENVIRONMENTAL IMPACTS

3.1 OVERVIEW

Table 3.1 identifies the potential environmental impacts that may arise from the construction and operation of the Project. The potential impacts that are expected to arise from the construction and operation of the Project are air quality, waste management, water quality, and hazard to life associated with the biodiesel production process.

Table 3.1 Potential Environmental Impacts

Potential Impact	Construction	Operation
• Gaseous Emissions	×	✓
• Dust	✓	×
• Odour	×	✓
• Noise	×	×
• Night-time Operations	×	✓
• Traffic (Land & Marine)	✓	✓
• Liquid Effluents, Discharges or Contaminated Runoff	✓	✓
• Generation of Waste or By-products	✓	✓
• Manufacturing, Storage, Use, Handling, Transport, or Disposal of Dangerous Goods, Hazardous Materials or Wastes	×	✓
• Hazard to Life	×	✓
• Landfill Gas Hazard	×	×
• Disposal of Spoil Material, including potentially Contaminated Materials	×	×
• Disruption of Water Movement or Bottom Sediment	×	×
• Unsightly Visual Appearance	×	×
• Cultural & Heritage	×	×
• Terrestrial Ecology	×	×
• Marine Ecology	×	×
• Cumulative Impacts	×	✓

Note:
✓ = Possible × = Not Expected

3.2 EXISTING ENVIRONMENTAL CONDITIONS

3.2.1 General

The Project is located in the EcoPark on the outskirts of Tuen Mun, adjacent to a number of industrial premises. The EcoPark is bounded to the north by Lung Mun Road, north of which is the restored Siu Lang Shui Landfill. To the southeast is the Tuen Mun Area 38 Fill Bank and River Trade Terminal, to the northwest is Shiu Wing Steel Mill, and to the south is the sea. The EcoPark was established with the aim to promote the local recycling industry

and provide a sustainable solution to Hong Kong's waste problem. In this context, the Project will accept used cooking oil as part of its feedstock. The Site was formed by reclamation under the Tuen Mun Area 38 Reclamation project and the nearest residential premises to the EcoPark are village houses at Lung Kwu Tan (>2km to the west) and Melody Garden (>2km to the east). The Site is on generally levelled ground and basic infrastructure such as roads, public drainage and sewerage networks, utilities, has been established.

3.2.2 *Air*

The local air quality is mainly influenced by industrial emissions from industrial premises abutting the EcoPark, vehicular traffic on Lung Mun Road, and marine vessels operating in the area. Air sensitive receivers have been identified in accordance with the criteria in *Annex 12* of the *Technical Memorandum on Environmental Impact Assessment Process* (EIAO–TM). The locations of representative ASRs are presented in *Figure 3.1* and listed in *Table 3.2*.

Table 3.2 Representative Air Sensitive Receptors

ASR	Location	Approximate Distance from nearest Site Boundary (m)
A1	Shiu Wing Steel Mill	300
A2	Green Island Cement	700
A3	Castle Peak Power Station	900
A4	River Trade Terminal	600
A5	River Trade Golf	1,900
A6	Lung Kwu Tan	2,200
A7	Butterfly Beach	2,700
A8	Melody Garden	3,400

3.2.3 *Noise*

The nearest noise sensitive receivers (NSR) to the Site is at Lung Kwu Tan (>2km to the west) and Melody Garden (>2km to the east).

3.2.4 *Water Quality*

The water body nearest to the Site is the coastal water immediately south of the Site, which is located within the North Western Water Control Zone (WCZ).

3.2.5 *Ecology*

No ecologically sensitive areas are identified within the EcoPark or in its immediate vicinity.

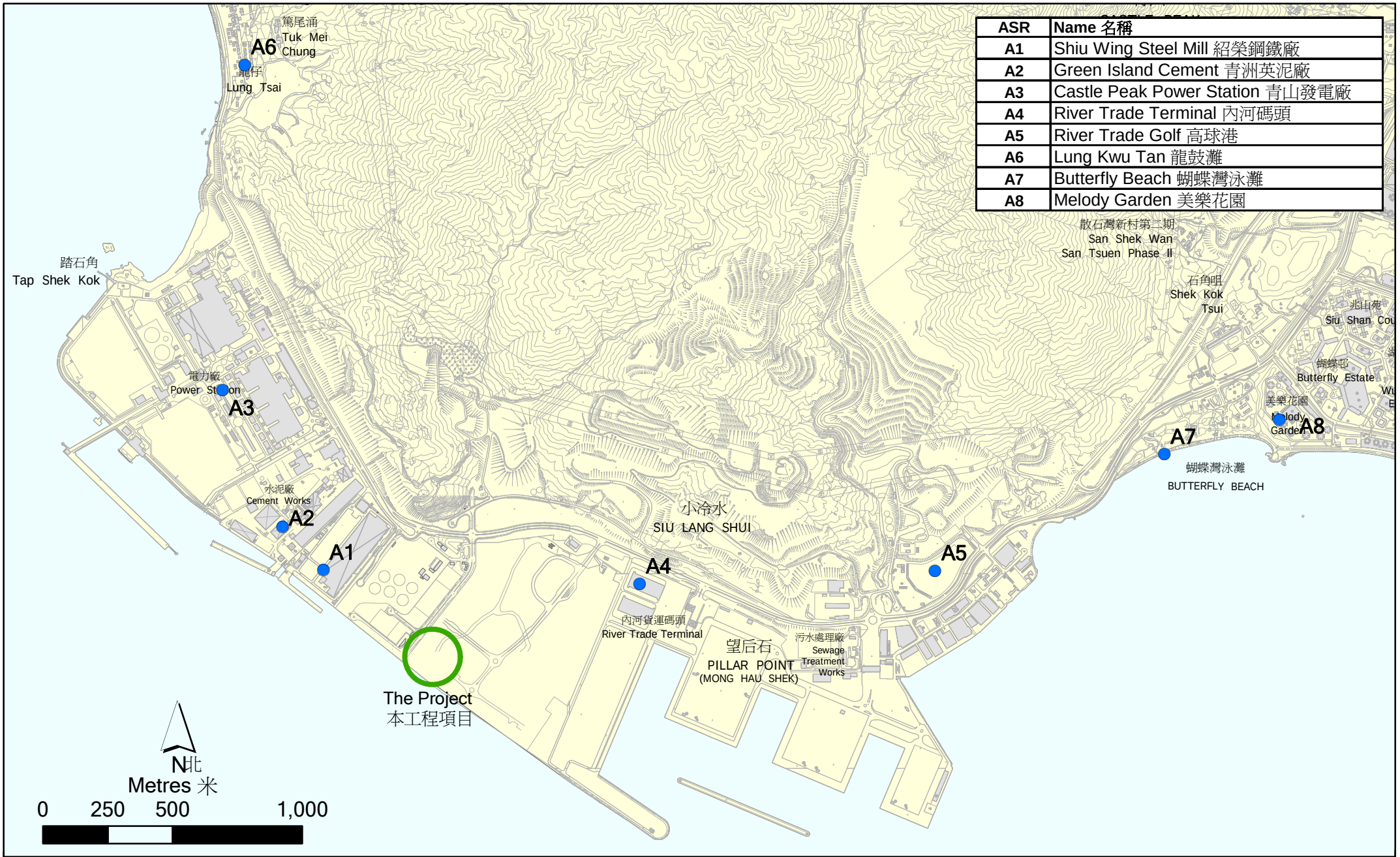

ASR	Name 名稱
A1	Shiu Wing Steel Mill 紹榮鋼鐵廠
A2	Green Island Cement 青洲英泥廠
A3	Castle Peak Power Station 青山發電廠
A4	River Trade Terminal 內河碼頭
A5	River Trade Golf 高球港
A6	Lung Kwu Tan 龍鼓灘
A7	Butterfly Beach 蝴蝶灣泳灘
A8	Melody Garden 美樂花園

Figure 3.1
圖 3.1

Location of Air Sensitive Receivers
空氣敏感受體的位置

File: 0109889_ASR.mxd
Date: 15/09/2010

Environmental Resources Management

ERM

3.2.6 *Cultural Heritage*

No cultural heritage resources are identified within the Site as it is located on land formed from reclamation.

3.2.7 *Landscape & Visual Impact Assessment*

The Project will be located within the EcoPark amidst facilities of similar nature established for the recycling and reuse of waste. The areas immediately adjacent to the EcoPark are also used for industrial purposes, with larger existing industrial facilities such as cement plant, power plant, and port facilities dominating the visual setting. The building height limit specified by the EcoPark will be observed.

3.2.8 *Landfill Gas Hazard*

The restored Siu Lang Shui Landfill is the landfill nearest to the Site. The Site however will be located outside the Consultation Zone for this landfill.

3.3 *POTENTIAL ENVIRONMENTAL IMPACTS*

3.3.1 *General*

This section highlights potential environmental impacts that are expected to arise from the construction and operation of the Project, which include air quality, noise, night-time operation, traffic, water quality and hazard to life.

3.3.2 *Air Quality*

Construction Phase

The Site is formed and levelled, and is currently vacant. No major earthworks are therefore required for the construction of the Project. Minor excavation works will be required for the construction of the foundation works and utilities with the Site. Dust generated from the concreting works for the construction of buildings will be minimal. With the implementation of dust suppression measures stipulated under the *Air Pollution Control (Construction Dust) Regulation* and good site practices, no adverse construction dust impact is anticipated.

Operational Phase

Air emissions from the Project include direct emissions from the biodiesel/diesel boilers and biogas flare for the wastewater treatment plant, fugitive emissions from the storage tanks, distillation columns, process tanks etc, and odours from wastewater treatment plant and waste cooking oil storage. The Project will comply with all Hong Kong environmental requirements and will adopt good engineering practices to minimise the potential impacts on air quality from its operation.

3.3.3 *Noise*

Construction Phase

The construction of the Project will involve the use of Powered Mechanical Equipment (PME) such as generators, excavators, piling machine, concrete breakers, concrete lorry mixers, and mobile/tower cranes. Given the relative small scale of the Project and the large separation distance between the NSRs and the Site (more than 2 km), the construction activities are not expected to cause adverse noise impacts on the identified NSRs.

Operational Phase

Noise from fixed sources during the operational phase will be generated from pumps, blowers, and reactors. Most of these noise sources will be enclosed. The designed total sound pressure level of the noise generated from all plant and equipment will be limited to 85 dB(A) at the Site boundary. Given the large separation distance between the NSR (> 2 km) and the Site, adverse noise impacts from the operation of the Project are not expected.

With respect to the small traffic generation due to the operation of the Project, the incremental traffic noise will be negligible when compared with the background traffic noise in the Study Area. Noise generated by traffic is not expected to cause any adverse impact on the identified NSRs.

3.3.4 *Night Time Operation*

Construction Phase

Piling works will not be undertaken during restricted hours (ie between 19:00 hrs and 07:00 hrs, and the entire day on general holidays and Sundays). As equipment installation works are not considered significant noise or dust generating activities, equipment installation may be undertaken 24 hours a day seven days a week. It is anticipated that the installation works will not cause adverse air and noise impacts on indentified sensitive receptors. Construction works undertaken within restricted hours will comply with the provisions of the *Noise Control Ordinance*.

Night installation works are anticipated to involve a few vehicles per hour. As the night-time traffic in the Study Area is low, adverse traffic impact to the local road system is not envisaged.

Operational Phase

The Project will operate 24 hours a day. One of the more significant concerns regarding night-time operation is noise generated by plant and equipment. Potential impact from facility operation is expected to be insignificant as the facility is located within an industrial area, the sound pressure level of all plant and equipment will be limited to 85dB(A), and potential impact on the nearest NSR is expected to be negligible. As the night-time traffic generated

by the Project is expected to be low, it is anticipated that the potential impact from the night-time traffic will be insignificant.

3.3.5 *Traffic*

Transportation of feedstock, reagents and products / by-products to and from the Project will generate additional traffic on Lung Mun Road. The anticipated daily traffic flow associated with the operation of the Project will only be up to about 40 truck trips. This is negligible when compared with the background traffic along Lung Mun Road. The operation of the Project is not expected to cause adverse traffic impacts to the local road networks.

3.3.6 *Water Quality Impact*

Construction Phase

No marine works or dredging of marine sediment will be required. Construction site runoff will be the major source of water quality impacts associated with the land-based construction activities. As discussed in *Section 2.2*, the construction of the Project will only involve minor earthwork. The construction of the superstructures has low risk of generating silty runoff. Portable toilets will be used and the sewage will be collected regularly by specialised contractor for off-site disposal. With the implementation of general good site practice in accordance with the *Practice Note for Professional Persons on Construction Site Drainage (ProPECC PN1/94),* the land-based construction activities will not cause adverse water quality impacts.

Operational Phase

The operation of the Project has a potential to cause adverse water quality impacts if the site runoff, wastewater and material storage are not properly managed. The first flush of the stormwater runoff from the Site will be intercepted and passed through a silt trap and an oil interceptor prior to discharge to existing stormwater drainage system of the EcoPark.

All process wastewater effluents generated from the Project will be collected and treated at the on-site wastewater treatment plant for reuse on-site or discharge to public foul sewer. The effluent quality will comply with the discharge standards stipulated in Table 1 of the *Technical Memorandum on Standards for Effluents Discharged to Drainage and Sewerage Systems, Inland and Coastal Water* published by the EPD. Domestic sewage generated from site personnel will be discharged to public foul sewer via appropriate connections. No adverse water quality impact due to operation of the Project is anticipated.

There is a potential for spillage of feedstock and/or reagents during the loading/unloading operations at the marine frontage. The operations will be undertaken at the paved loading/unloading station and will be manned by trained staff and closely monitored with flow control equipment. Any spillages will be intercepted by the collection drain and conveyed to the on-site wastewater treatment plant. An emergency response plan will be developed during the detailed design stage to stipulate the actions to be taken

in case spillage occurred and prevent any spillages from discharge into the sea.

3.3.7 *Ecology*

As the Project will be located on reclaimed land with no ecological sensitivity, no potential terrestrial ecological impacts are foreseen. In addition, no marine ecological impacts are anticipated as no marine structures will be constructed as a part of the Project.

3.3.8 *Landscape & Visual*

Landscape Impact

The Project will be located within the EcoPark, where vegetation is limited (mainly grasses). The development of the Project will therefore have negligible impact on existing landscape resources.

Visual Impact

Construction Phase

As the Project will be located at the EcoPark and the scale of the construction activities is relatively small, no significant visual impacts in the overall industrial setting of the area.

Operational Phase

The heights of the buildings and tanks of the Project are expected to be comparable to the adjacent buildings within the EcoPark, and therefore the Project is not anticipated to be visually intrusive in the overall setting of the EcoPark.

3.3.9 *Waste*

Construction Phase

Construction and Demolition Materials (C&DM): The quantity of vegetation waste to be generated from site preparation will be minimal and it will be disposed of at one of the landfills. C&DM will be generated from site preparation works and construction of the Project. As the Site has been formed and levelled, no major earthworks will be required for site formation. All excavated materials generated from the foundation works will be reused on site as far as practicable.

With respect to the small scale of the new building construction works, it is anticipated that a small amount of C&DM will be generated. The C&DM will be segregated on site into public fill and construction waste (including paper, metals, plastics and wood waste from packaging materials and wooden formworks) and stored in separate skips for disposal at public fill reception facilities at Tuen Mun Area 38 and landfills, respectively. Recyclables, such as paper, metal and wood will be stored in different skips for recycling as far

as practicable. It is expected that the amount of construction waste requiring disposal at landfills will be small. No adverse waste management impact is anticipated.

Chemical Waste: The chemical waste likely to be generated from the construction activities will, for the most part, arise from the maintenance of construction plant and equipment. The quantity of chemical waste to be generated will be small (expected to be less than one hundred litres per month). These chemical wastes will be readily accepted for treatment and disposal at the Chemical Waste Treatment Centre (CWTC) at Tsing Yi.

Storage, handling, transport and disposal of chemical waste will be arranged in accordance with the *Code of Practice on the Packaging, Labelling and Storage of Chemical Waste* published by the EPD. Provided that this occurs, the potential environmental impacts arising from the handling, storage and disposal of a small amount of chemical waste generated from the construction activities will be negligible.

Sewage and General Refuse: Sewage and general refuse will be generated by the construction workforces. An adequate number of portable toilets will be provided on site to ensure that sewage from site staff is properly collected, for treatment and disposal. The portable toilets will be desludged and maintained regularly by a specialised contractor. Recyclable materials (ie paper, plastic bottles and aluminium cans) will be separated for recycling, in order to reduce the amount of general refuse to be disposed of at landfills. Adequate number of enclosed waste containers will be provided on site to avoid spillage of waste. No adverse environmental impacts from sewage and general refuse are envisaged.

Operational Phase

Table 3.3 summarises the types and quantity of solid wastes that will generated from the operation of the Project.

Table 3.3 Solid Wastes from the Operation of the Project

Waste	Quantity/Frequency	Reuse / Disposal
Sludge from wastewater treatment	About 0.4 tpd of dewatered sludge (> 30% dry solid content)	Disposal at landfill by trucks
Spent activated carbon/silica gel/ bleaching earth from bleaching process	About 1.25 to 5 tpd	Collection by supplier for regeneration
Chemical waste (used lubricating oil, solvents, wastes from laboratory)	About a few litres a month	Disposal at CWTC or other licensed facility
General refuse from site personnel	Less than 50kg per day	Disposal at landfill by trucks.

The disposal of these operational wastes at landfills and CWTC is not expected to have an adverse environmental impact on landfills and CWTC. Further, good management practices (such as use of appropriate containers for storage and employment of reputable and/or licensed contractors) would minimise the potential impact from the storage and handling of these wastes.

3.3.10 Land Contamination

Construction Phase

The Site is on reclaimed land and has yet to be developed. There is no land contamination issue associated with the construction of the Project.

Operational Phase

During the operation of the Project, spillages, if not properly managed, could cause land contamination. The materials to be stored on-site include reagents (such as phosphoric acid, methanol, sodium hydroxide) and products (such as biodiesel, glycerine and refined vegetable oils). Biodiesel is biodegradable and the potential environmental impact due to accidental spillage of biodiesel or leakage from the biodiesel storage tanks will be much lower than that for diesel of fossil origin.

WCO is not a chemical / hazardous waste, and therefore any spillage within the Site is not expected to cause land contamination as defined by the EPD.

All materials storage tanks will be designed to comply with the relevant statutory requirements (including structural integrity of the tank; construction of a containment bund and concrete floor; and the type of storage tank will be compatible with the materials) minimising the potential of land contamination.

To allow quick reaction to spill incidents an adequate number of spill kits will be provided in accessible locations. In addition, an emergency response plan will be developed during the detailed design stage to ensure that any spillage of reagents or products, and leakage from the storage tanks will be responded to immediately and the spills or leaks are mitigated. With the implementation of the precautionary design measures and emergency response plans, potential for land contamination from the operation of the Project is considered to be minimal.

3.3.11 Hazard to Life

A risk assessment of the Project will be conducted to assess the potential hazard to life associated with its operations. The key hazards are anticipated to be associated with the biodiesel production process in which high pressure, elevated temperature and flammable chemical reagents are involved.

Based on an examination of hazards associated with the Project, a checklist of release cases will be developed and assessed in the EIA Study.

3.3.12 *Cumulative Impacts*

Construction Phase

The Project will be located in an industrial area, with the closest residential development more than 2 km away. The potential impact to local air quality, water quality, noise levels, traffic, ecology, landscape, waste management, land contamination, and hazard to life, from its construction are considered minimal. There is a possibility that the Project will be constructed at the same as other developments within the EcoPark for which committed programmes are not yet available. However, with the general industrial setting in the immediate vicinity of the Project, cumulative impacts from the construction of the Project are not envisaged.

Operational Phase

As the Project will be located in an industrial area, with the closest residential development more than 2 km away, the potential environmental impact from its operation is considered to be minimal. As a result, cumulative impacts from the operation of the Project are not envisaged.

3.4 *ENVIRONMENTAL PROTECTION MEASURES*

The following general good site management practices and environmental protection measures will be implemented for the Project.

Construction Phase

- All debris and materials will be covered or stored in a sheltered debris collection area. Dust control measures such as water spaying on roads and dusty areas, covering of lorries by impervious sheets and controlling of the falling height of fill materials, will be implemented in accordance with *Air Pollution Control Ordinance*.

- Idling PME will be switched off. Low noise PME will be used as far as practicable. Work will be planned to avoid sequential uses of noisy PME.

- Public fill and general refuse will be segregated and stored separately for disposal. Waste will be properly stored at site and windblown litter and dust will be minimised during transportation by either covering trucks or transporting wastes in enclosed containers. Waste will be disposed of at licensed sites. A trip-ticket system will be established in accordance with *ETWBTC No. 31/2004* to monitor the disposal of construction waste and to control fly-tipping.

- The contractor will register as a chemical waste producer with EPD. Chemical waste will be handled in accordance with the *Code of Practice on the Packaging, Handling and Storage of Chemical Waste*.

- Effluent discharge from construction activities shall conform to relevant *ProPECC Note 1/94 Construction Site Drainage* requirements and comply with the *Technical Memorandum on Standards for Effluents Discharged into Drainage and Sewerage Systems, Inland and Coastal Waters* under the *WPCO*.

Operational Phase

Proven technologies and environmental protection measures (for example, limit the total sound pressure level at the site boundary to 85 dB(A), waste air cleaning system etc) have been adopted for the design and operation of the proposed facility.

3.5 REFERENCE TO PREVIOUSLY APPROVED EIA REPORTS

For the preparation of this Project Profile, reference has been made to the *EIA for Development of a Biodiesel Plant at Tseung Kwan O Industrial Estate* approved on 26 February 2009 (AEIAR-131/2009). The Project being proposed and the biodiesel plant at Tseung Kwan O Industrial Estate (TKOIE) will involve different proprietary industrial processes and different feedstock but they are both essentially based on the production of biodiesel through a tranesterification process. The findings of AEIAR-131/2009 with regard to operational air quality and risk impacts are therefore considered relevant to the Project being proposed. Notwithstanding the similarities indicated above, the exact relevance of the mitigation measures presented in AEIAR-131/2009 will be determined in the EIA Study to be undertaken with reference to the detailed design and operations of the Project.