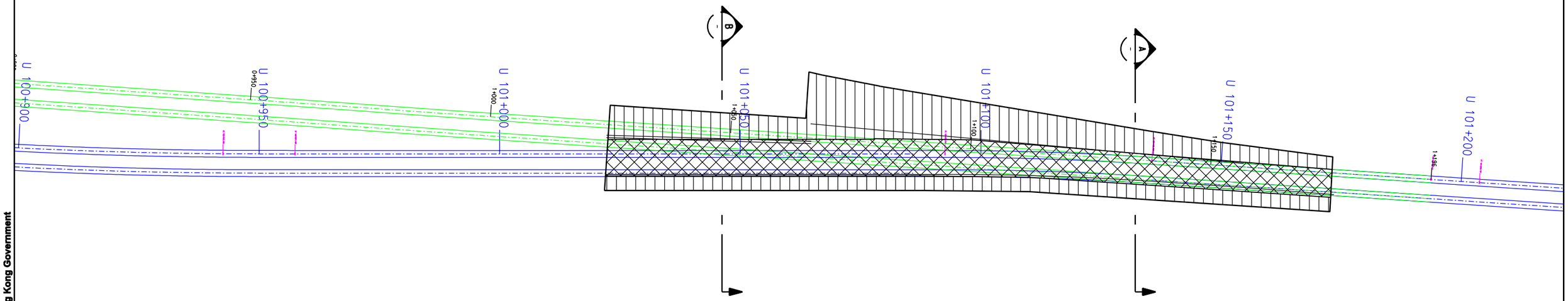

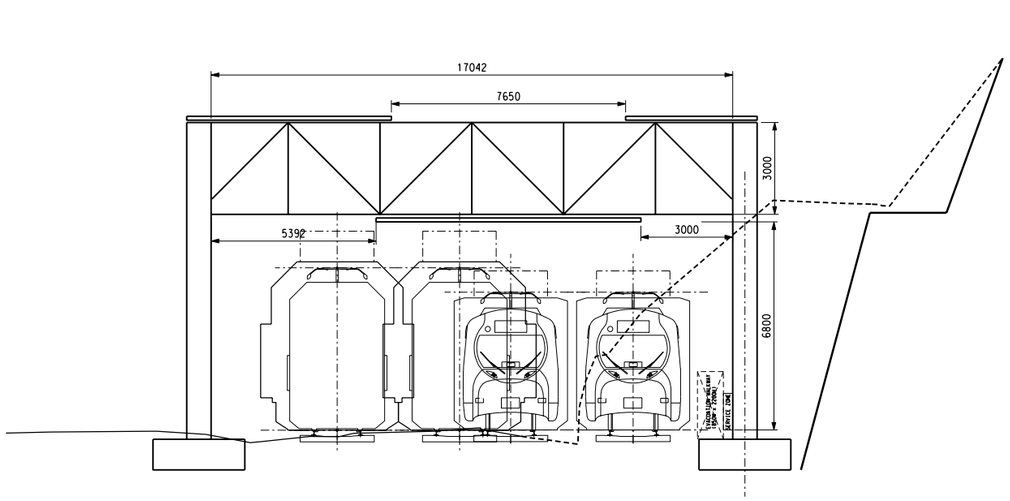

TYPICAL CROSS SECTION B

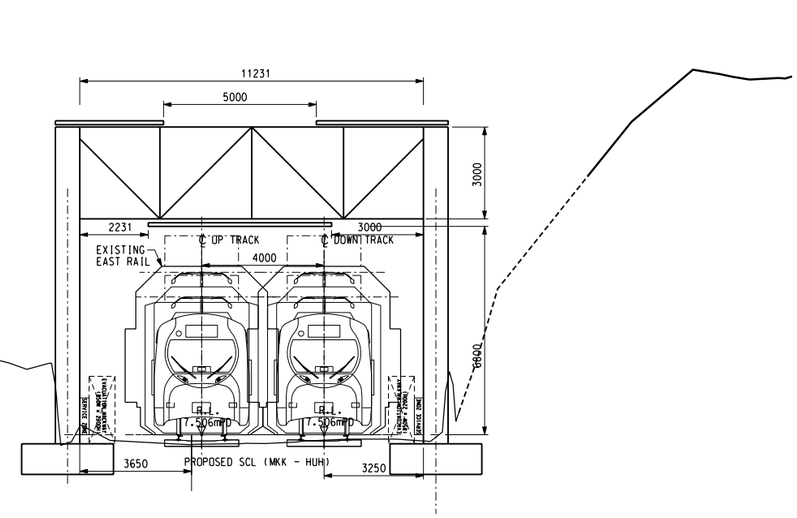

TYPICAL CROSS SECTION A

DRAWINGS FOR INDICATION ONLY

REV	DESCRIPTION	BY	DATE	APPROVED	REV	DESCRIPTION	BY	DATE	APPROVED

DRAWN	KTH
DESIGNED	LCLL
CHECKED	LCLL
APPROVED	IMW
DATE	26/JAN/2011

DO NOT SCALE DRAWINGS. ALL DIMENSIONS SHALL BE VERIFIED ON SITE.
© MTR CORPORATION LIMITED 2008 COPYRIGHT IN RESPECT OF THIS DRAWING / DOCUMENT IS OWNED BY THE MTR CORPORATION LIMITED OF HONG KONG. NO REPRODUCTION OF THE DRAWING / DOCUMENT OR ANY PART BY WHATEVER MEANS IS PERMITTED WITHOUT THE PRIOR WRITTEN CONSENT OF THE MTR CORPORATION LIMITED.

MTR

SHATIN TO CENTRAL LINK

ORIGINATOR

AECOM

CADD REF. Appendix 6_14.dgn

TITLE

NEX/2213
EIA STUDY FOR SCL (MKK - HUH)
PROPOSED MITIGATION MEASURES FOR RAIL NOISE IN OPERATIONAL PHASE

SCALE 1 : 800 (A3)

FIGURE NO. APPENDIX 6.14

REV. A

Maps reproduced with permission of the Director of Lands, © Hong Kong Government

PLOT DRV: r:\ustnset\MTR\PLOTDRIVER\WINDOWS\A3 COLOUR.plt
MODELNAME: Plan PRINTED BY: ZHOURH 2011-3-31 11:01:43
FILENAME: M:\projects\60050763\DRAWINGS\SKETCH\Appendix 6_14.dgn