Ex 600 Sewer (FMH7034212-FMH7034213)
Worksheet for Circular Channel

Project Description	
Project File	I:\civil\active jobs\91253 emsd depot\sewerage\cal\sia_r0.fm2
Worksheet	Ex 600 Sewer
Flow Element	Circular Channel
Method	Darcy-Weisbach: Colebrook-White
Solve For	Discharge

Input Data		
Absolute Roughness	6.00	mm
Channel Slope	0.005155	m/m
Kinematic Viscosity	0.1306e-5	m^2/s
Depth	600	mm
Diameter	600	mm

Results		
Discharge	357.19	l/s
Friction Factor	0.04	
Reynolds Number	580,377.64	
Flow Area	0.28	m^2
Wetted Perimeter	1.88	m
Top Width	0.00	m
Critical Depth	0.39	m
Percent Full	100.00	
Critical Slope	0.009575	m/m
Velocity	1.26	m/s
Velocity Head	0.08	m
Specific Energy	FULL	m
Froude Number	FULL	
Maximum Discharge	0.37	m^3/s
Full Flow Capacity	0.36	m^3/s
Full Flow Slope	0.005156	m/m

Ex 600 Sewer (FMH7034212-FMH7034213)
Cross Section for Circular Channel

Project Description	
Project File	I:\civil\active jobs\91253 emsd depot\sewerage\cal\sia_r0.fm2
Worksheet	Ex 600 Sewer
Flow Element	Circular Channel
Method	Darcy-Weisbach: Colebrook-White
Solve For	Discharge

Section Data		
Absolute Roughness	6.00	mm
Channel Slope	0.005155	m/m
Kinematic Viscosity	0.1306e-5	m²/s
Depth	600	mm
Diameter	600	mm
Discharge	357.19	l/s

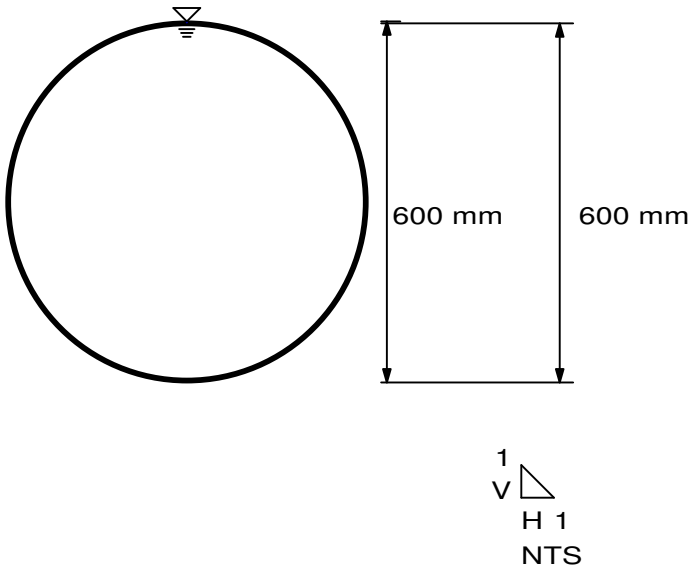

Ex 2100 Sewer (FMH7034198-FSH7001100)
Worksheet for Circular Channel

Project Description	
Project File	I:\civil\active jobs\91253 emsd depot\sewerage\cal\sia_r0.fm2
Worksheet	Ex 2100 Sewer
Flow Element	Circular Channel
Method	Darcy-Weisbach: Colebrook-White
Solve For	Discharge

Input Data		
Absolute Roughness	6.00	mm
Channel Slope	0.005000	m/m
Kinematic Viscosity	0.1306e-5	m^2/s
Depth	2,100	mm
Diameter	2,100	mm

Results		
Discharge	9,777.62	l/s
Friction Factor	0.03	
Reynolds Number	4,539,213.69	
Flow Area	3.46	m^2
Wetted Perimeter	6.60	m
Top Width	0.00	m
Critical Depth	1.50	m
Percent Full	100.00	
Critical Slope	0.007257	m/m
Velocity	2.82	m/s
Velocity Head	0.41	m
Specific Energy	FULL	m
Froude Number	FULL	
Maximum Discharge	10.17	m^3/s
Full Flow Capacity	9.78	m^3/s
Full Flow Slope	0.005002	m/m

Ex 2100 Sewer (FMH7034198-FSH7001100)
Cross Section for Circular Channel

Project Description	
Project File	I:\civil\active jobs\91253 emsd depot\sewerage\cal\sia_r0.fm2
Worksheet	Ex 2100 Sewer
Flow Element	Circular Channel
Method	Darcy-Weisbach: Colebrook-White
Solve For	Discharge
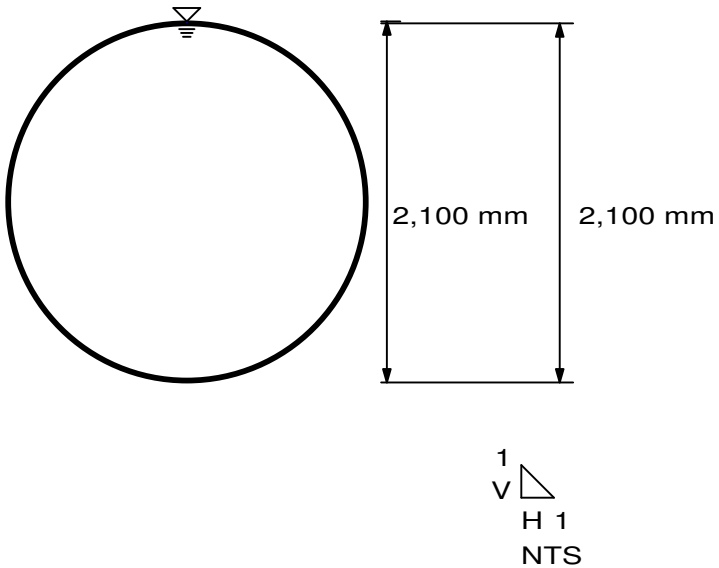
Section Data		
Absolute Roughness	6.00	mm
Channel Slope	0.005000	m/m
Kinematic Viscosity	0.1306e-5	m²/s
Depth	2,100	mm
Diameter	2,100	mm
Discharge	9,777.62	l/s