Annex 5C-1 : Preliminary Construction Programme

Activity	2021							2022												2023												2024												2025												2026		
	6	7	8	9	10	11	12	1	2	3	4	5	6	7	8	9	10	11	12	1	2	3	4	5	6	7	8	9	10	11	12	1	2	3	4	5	6	7	8	9	10	11	12	1	2	3	4	5	6	7	8	9	10	11	12	10	11	12
Construction of DWFI System																																																											
Section A – A1						Y	Y	Y	Y	Y																																																
Section A – A2																		Y	Y	Y	Y	Y																																				
Section A – A3						Y	Y	Y	Y	Y																																																
Section A – A4																		Y	Y	Y	Y	Y																																				
Section B – B1																																										Y	Y	Y	Y	Y												
Section B – B2																																																							Y	Y	Y	Y	Y
Section B – B3																														Y	Y	Y	Y	Y																								
Construction of Rising Mains																																																											
Rising Mains	Y	Y	Y	Y	Y						Y	Y	Y	Y	Y	Y	Y						Y	Y	Y	Y																																
Construction of Pumping Station																																																											
DWF Pumping Station	Y	Y	Y	Y	Y	Y	Y	Y	Y	Y	Y	Y	Y	Y	Y	Y	Y	Y	Y	Y	Y	Y	Y	Y	Y	Y																																

Annex 5C-2: Construction Noise Calculation for Unmitigated Scenario

Construction Plant Inventory (Unmitigated Scenario)

No.	Activities	Plant	TM Ref. / Other Ref. [1]	No. of PME	On- time %	Unit SWL, dB(A)	SWL, dB(A)	Total SWL, dB(A)[2]
1	**Construction of DWFI System**	Breaker, hand-held, mass > 10kg and < 20kg	CNP 024	1	75%	108	107	**118**
		Generator, super silenced, 70dB(A) at 7m	CNP 103	2	100%	95	98	
		Water pump (electric)	CNP 281	1	100%	88	88	
		Dump truck, gross vehicle weight > 38 tonne	CNP 067	1	50%	117	114	
		Concrete lorry mixer	CNP 044	1	50%	109	106	
		Excavator/loader, wheeled/tracked	CNP 081	1	100%	112	112	
		Poker, vibratory, hand-held (electric)	EPD/PME/19	1	100%	102	102	
		Crane, mobile/barge mounted (diesel)	CNP 048	1	50%	112	109	
2	**Construction of Rising Main**	Breaker, hand-held, mass > 10kg and < 20kg	CNP 024	1	75%	108	107	**118**
		Generator, super silenced, 70dB(A) at 7m	CNP 103	2	100%	95	98	
		Water pump (electric)	CNP 281	1	100%	88	88	
		Dump truck, gross vehicle weight > 38 tonne	CNP 067	1	50%	117	114	
		Concrete lorry mixer	CNP 044	1	50%	109	106	
		Excavator/loader, wheeled/tracked	CNP 081	1	100%	112	112	
		Poker, vibratory, hand-held (electric)	EPD/PME/19	1	100%	102	102	
		Crane, mobile/barge mounted (diesel)	CNP 048	1	50%	112	109	
3	**Construction of DWF Pumping Station**	Breaker, hand-held, mass > 10kg and < 20kg	CNP 024	1	75%	108	107	**118**
		Generator, super silenced, 70dB(A) at 7m	CNP 103	2	100%	95	98	
		Water pump (electric)	CNP 281	1	100%	88	88	
		Dump truck, gross vehicle weight > 38 tonne	CNP 067	1	50%	117	114	
		Drill rig, rotary type (diesel)	EPD/PME/12	1	100%	110	110	
		Concrete lorry mixer	CNP 044	1	50%	109	106	
		Excavator/loader, wheeled/tracked	CNP 081	1	100%	112	112	
		Poker, vibratory, hand-held (electric)	EPD/PME/19	1	100%	102	102	
		Crane, mobile/barge mounted (diesel)	CNP 048	1	50%	112	109	

Notes:

[1] Reference: Sound power levels of other commonly used PME (http://www.epd.gov.hk/epd/sites/default/files/epd/english/application_for_licences/guidance/files/OtherSWLe.pdf)

[2] The figures are rounded-up to a whole number.

Summary of Predicted Noise Levels from Construction (Unmitigated)

NSR	Description	EIAO-TM Noise Criteria, dB(A)	Predicted Construction Noise Level, db(A)																																																							Max. Predicted CNL, db(A)
			2021							2022												2023												2024												2025												2026			
			6	7	8	9	10	11	12	1	2	3	4	5	6	7	8	9	10	11	12	1	2	3	4	5	6	7	8	9	10	11	12	1	2	3	4	5	6	7	8	9	10	11	12	1	2	3	4	5	6	7	8	9	10	11	12	1	2	3	
NSR01	Tung Tau Wai San Tsuen	75	79	79	79	79	79	72	72	72	72	72	79	79	79	79	79	79	79	71	71	71	71	71	79	79	79	79	0	0	0	55	55	55	55	55	0	0	0	0	0	0	0	52	52	52	52	52	0	0	0	0	0	0	0	53	53	53	53	53	79
NSR02	Shan Pui Chung Hau Tsuen	75	82	82	82	82	82	76	76	76	76	76	82	82	82	82	82	82	82	75	75	75	75	75	82	82	82	82	0	0	0	55	55	55	55	55	0	0	0	0	0	0	0	52	52	52	52	52	0	0	0	0	0	0	0	54	54	54	54	54	82
NSR03	Twin Regency	75	89	89	89	89	89	88	88	88	88	88	89	89	89	89	89	89	89	88	88	88	88	88	89	89	89	89	0	0	0	56	56	56	56	56	0	0	0	0	0	0	0	53	53	53	53	53	0	0	0	0	0	0	0	54	54	54	54	54	89
NSR04	Yuk Yat Garden	75	68	68	68	68	68	72	72	72	72	72	68	68	68	68	68	68	68	75	75	75	75	75	68	68	68	68	0	0	0	59	59	59	59	59	0	0	0	0	0	0	0	54	54	54	54	54	0	0	0	0	0	0	0	56	56	56	56	56	75
NSR05	Wang Fu Court	75	70	70	70	70	70	75	75	75	75	75	70	70	70	70	70	70	70	75	75	75	75	75	70	70	70	70	0	0	0	59	59	59	59	59	0	0	0	0	0	0	0	55	55	55	55	55	0	0	0	0	0	0	0	57	57	57	57	57	75
NSR06	Yeung Uk San Tsuen	75	64	64	64	64	64	66	66	66	66	66	64	64	64	64	64	64	64	76	76	76	76	76	64	64	64	64	0	0	0	61	61	61	61	61	0	0	0	0	0	0	0	56	56	56	56	56	0	0	0	0	0	0	0	58	58	58	58	58	76
NSR07	Yuen Long Long Ping Estate Wai Chow School	70/65	62	62	62	62	62	64	64	64	64	64	62	62	62	62	62	62	62	72	72	72	72	72	62	62	62	62	0	0	0	64	64	64	64	64	0	0	0	0	0	0	0	57	57	57	57	57	0	0	0	0	0	0	0	60	60	60	60	60	72
NSR08	The Spectra	75	62	62	62	62	62	64	64	64	64	64	62	62	62	62	62	62	62	77	77	77	77	77	62	62	62	62	0	0	0	68	68	68	68	68	0	0	0	0	0	0	0	59	59	59	59	59	0	0	0	0	0	0	0	63	63	63	63	63	77
NSR09	Tai Kiu Tsuen	75	60	60	60	60	60	63	63	63	63	63	60	60	60	60	60	60	60	67	67	67	67	67	60	60	60	60	0	0	0	86	86	86	86	86	0	0	0	0	0	0	0	62	62	62	62	62	0	0	0	0	0	0	0	69	69	69	69	69	86
NSR10	Fuk Yip Building	75	58	58	58	58	58	63	63	63	63	63	58	58	58	58	58	58	58	63	63	63	63	63	58	58	58	58	0	0	0	74	74	74	74	74	0	0	0	0	0	0	0	67	67	67	67	67	0	0	0	0	0	0	0	89	89	89	89	89	89
NSR11	Yuen Fat House	75	57	57	57	57	57	65	65	65	65	65	57	57	57	57	57	57	57	62	62	62	62	62	57	57	57	57	0	0	0	68	68	68	68	68	0	0	0	0	0	0	0	73	73	73	73	73	0	0	0	0	0	0	0	89	89	89	89	89	89
NSR12	Healey Building	75	57	57	57	57	57	65	65	65	65	65	57	57	57	57	57	57	57	62	62	62	62	62	57	57	57	57	0	0	0	67	67	67	67	67	0	0	0	0	0	0	0	75	75	75	75	75	0	0	0	0	0	0	0	83	83	83	83	83	83
NSR13	Wah Shing Mansion	75	56	56	56	56	56	67	67	67	67	67	56	56	56	56	56	56	56	62	62	62	62	62	56	56	56	56	0	0	0	65	65	65	65	65	0	0	0	0	0	0	0	85	85	85	85	85	0	0	0	0	0	0	0	74	74	74	74	74	85
NSR14	CCC Chun Kwong Primary School	70/65	56	56	56	56	56	69	69	69	69	69	56	56	56	56	56	56	56	63	63	63	63	63	56	56	56	56	0	0	0	61	61	61	61	61	0	0	0	0	0	0	0	85	85	85	85	85	0	0	0	0	0	0	0	70	70	70	70	70	85
NSR15	Tse King House	75	55	55	55	55	55	80	80	80	80	80	55	55	55	55	55	55	55	64	64	64	64	64	55	55	55	55	0	0	0	60	60	60	60	60	0	0	0	0	0	0	0	74	74	74	74	74	0	0	0	0	0	0	0	65	65	65	65	65	80
NSR16	On Ning Building	75	54	54	54	54	54	82	82	82	82	82	54	54	54	54	54	54	54	65	65	65	65	65	54	54	54	54	0	0	0	59	59	59	59	59	0	0	0	0	0	0	0	70	70	70	70	70	0	0	0	0	0	0	0	63	63	63	63	63	82
NSR17	Ho Wang Building	75	54	54	54	54	54	89	89	89	89	89	54	54	54	54	54	54	54	66	66	66	66	66	54	54	54	54	0	0	0	59	59	59	59	59	0	0	0	0	0	0	0	69	69	69	69	69	0	0	0	0	0	0	0	62	62	62	62	62	89
NSR18	Caritas Yuen Long Chan Chun Ha Secondary School	70/65	54	54	54	54	54	80	80	80	80	80	54	54	54	54	54	54	54	71	71	71	71	71	54	54	54	54	0	0	0	57	57	57	57	57	0	0	0	0	0	0	0	65	65	65	65	65	0	0	0	0	0	0	0	60	60	60	60	60	80
NSR19	Sun Fai Court	75	53	53	53	53	53	70	70	70	70	70	53	53	53	53	53	53	53	89	89	89	89	89	53	53	53	53	0	0	0	56	56	56	56	56	0	0	0	0	0	0	0	61	61	61	61	61	0	0	0	0	0	0	0	58	58	58	58	58	89
NSR20	Ma Tin Tsuen - Kung Um Road	75	52	52	52	52	52	65	65	65	65	65	52	52	52	52	52	52	52	87	87	87	87	87	52	52	52	52	0	0	0	54	54	54	54	54	0	0	0	0	0	0	0	59	59	59	59	59	0	0	0	0	0	0	0	56	56	56	56	56	87
NSR21	Yuen Long Villa	75	53	53	53	53	53	66	66	66	66	66	53	53	53	53	53	53	53	88	88	88	88	88	53	53	53	53	0	0	0	55	55	55	55	55	0	0	0	0	0	0	0	60	60	60	60	60	0	0	0	0	0	0	0	57	57	57	57	57	88
NSR22	Lung Tin Tsuen	75	52	52	52	52	52	62	62	62	62	62	52	52	52	52	52	52	52	73	73	73	73	73	52	52	52	52	0	0	0	53	53	53	53	53	0	0	0	0	0	0	0	57	57	57	57	57	0	0	0	0	0	0	0	55	55	55	55	55	73
NSR23	Wang Chau Lam Uk Tsuen	75	75	75	75	75	75	76	76	76	76	76	75	75	75	75	75	75	75	72	72	72	72	72	75	75	75	75	0	0	0	56	56	56	56	56	0	0	0	0	0	0	0	53	53	53	53	53	0	0	0	0	0	0	0	55	55	55	55	55	76
NSR24	Wang Chau Tung Tau Wai	75	74	74	74	74	74	73	73	73	73	73	74	74	74	74	74	74	74	70	70	70	70	70	74	74	74	74	0	0	0	56	56	56	56	56	0	0	0	0	0	0	0	52	52	52	52	52	0	0	0	0	0	0	0	54	54	54	54	54	74
NSR25	Hong Kong School of Motoring - Yuen Long Road Safety Centre	70/65	66	66	66	66	66	63	63	63	63	63	66	66	66	66	66	66	66	62	62	62	62	62	66	66	66	66	0	0	0	52	52	52	52	52	0	0	0	0	0	0	0	50	50	50	50	50	0	0	0	0	0	0	0	51	51	51	51	51	66
R1	Sol City (Planned)	75	59	59	59	59	59	62	62	62	62	62	59	59	59	59	59	59	59	65	65	65	65	65	59	59	59	59	0	0	0	85	85	85	85	85	0	0	0	0	0	0	0	64	64	64	64	64	0	0	0	0	0	0	0	72	72	72	72	72	85

Predicted Noise Level exceeded the corresponding EIAO-TM noise criteria

Construction Noise Assessment (Unmitigated)

NSR01 Tung Tau Wai San Tsuen

Activity	SWL dB(A)	Distance m	Corr. for Distance dB(A) [1][2]	Corr. for Topo	Corr. for façade dB(A)	2021							2022												2023												2024												2025												2026		
						6	7	8	9	10	11	12	1	2	3	4	5	6	7	8	9	10	11	12	1	2	3	4	5	6	7	8	9	10	11	12	1	2	3	4	5	6	7	8	9	10	11	12	1	2	3	4	5	6	7	8	9	10	11	12	1	2	3
Construction of DWFI System																																																																
Section A – A1	118	184	-53	0	3						68	68	68	68	68																																																		
Section A – A2	118	387	-60	0	3																		61	61	61	61	61																																						
Section A – A3	118	1318	-70	0	3						50	50	50	50	50																																																	
Section A – A4	118	1580	-72	0	3																		49	49	49	49	49																																					
Section B – B1	118	1137	-69	0	3																																										52	52	52	52	52											
Section B – B2	118	965	-68	0	3																																																						53	53	53	53	53
Section B – B3	118	815	-66	0	3																													55	55	55	55	55																										
Construction of Rising Mains																																																																
Rising Mains	118	56	-43	0	3	78	78	78	78	78						78	78	78	78	78	78	78						78	78	78	78																																	
Construction of Pumping Station																																																																
DWF Pumping Station	118	141	-51	0	3	70	70	70	70	70	70	70	70	70	70	70	70	70	70	70	70	70	70	70	70	70	70	70	70	70	70																																	
Predicted Noise Level during Daytime Period, dB(A)						79	79	79	79	79	72	72	72	72	72	79	79	79	79	79	79	79	71	71	71	71	71	79	79	79	79	0	0	0	55	55	55	55	55	0	0	0	0	0	0	0	52	52	52	52	52	0	0	0	0	0	0	0	53	53	53	53	53

Note:

[1] Distance Correction for PMEs = $10*\log(2*PI*r^2)$

[2] The figures are rounded-up to a whole number.

Construction Noise Assessment (Unmitigated)

NSR02 Shan Pui Chung Hau Tsuen

Activity	SWL dB(A)	Distance m	Corr. for Distance dB(A) [1][2]	Corr. for Topo	Corr. for façade dB(A)	2021							2022												2023												2024												2025												2026		
						6	7	8	9	10	11	12	1	2	3	4	5	6	7	8	9	10	11	12	1	2	3	4	5	6	7	8	9	10	11	12	1	2	3	4	5	6	7	8	9	10	11	12	1	2	3	4	5	6	7	8	9	10	11	12	1	2	3
Construction of DWFI System																																																															
Section A – A1	118	167	-52	0	3						68	68	68	68	68																																																	
Section A – A2	118	368	-59	0	3																		61	61	61	61	61																																						
Section A – A3	118	1255	-70	0	3						51	51	51	51	51																																																	
Section A – A4	118	1510	-72	0	3																		49	49	49	49	49																																					
Section B – B1	118	1081	-69	0	3																																										52	52	52	52	52											
Section B – B2	118	916	-67	0	3																																																						54	54	54	54	54
Section B – B3	118	775	-66	0	3																													55	55	55	55	55																									
Construction of Rising Mains																																																															
Rising Mains	118	37	-39	0	3	81	81	81	81	81						81	81	81	81	81	81	81						81	81	81	81																																	
Construction of Pumping Station																																																															
DWF Pumping Station	118	85	-47	0	3	75	75	75	75	75	75	75	75	75	75	75	75	75	75	75	75	75	75	75	75	75	75	75	75	75	75																																	
Predicted Noise Level during Daytime Period, dB(A)						82	82	82	82	82	76	76	76	76	76	82	82	82	82	82	82	82	75	75	75	75	75	82	82	82	82	0	0	0	55	55	55	55	55	0	0	0	0	0	0	0	52	52	52	52	52	0	0	0	0	0	0	0	54	54	54	54	54

Note:

[1] Distance Correction for PMEs = $10*\log(2*PI*r^2)$

[2] The figures are rounded-up to a whole number.

Construction Noise Assessment (Unmitigated)

NSR03 Twin Regency

Activity	SWL dB(A)	Distance m	Corr. for Distance dB(A) [1][2]	Corr. for Topo	Corr. for façade dB(A)	2021							2022												2023												2024												2025												2026		
						6	7	8	9	10	11	12	1	2	3	4	5	6	7	8	9	10	11	12	1	2	3	4	5	6	7	8	9	10	11	12	1	2	3	4	5	6	7	8	9	10	11	12	1	2	3	4	5	6	7	8	9	10	11	12	1	2	3
Construction of DWFI System																																																															
Section A – A1	118	83	-46	0	3						74	74	74	74	74																																																	
Section A – A2	118	278	-57	0	3																		64	64	64	64	64																																						
Section A – A3	118	1172	-69	0	3						51	51	51	51	51																																																	
Section A – A4	118	1429	-71	0	3																		50	50	50	50	50																																					
Section B – B1	118	995	-68	0	3																																											53	53	53	53	53											
Section B – B2	118	829	-66	0	3																																																							54	54	54	54	54
Section B – B3	118	687	-65	0	3																														56	56	56	56	56																									
Construction of Rising Mains																																																															
Rising Mains	118	27	-36	0	3	84	84	84	84	84						84	84	84	84	84	84	84						84	84	84	84																																	
Construction of Pumping Station																																																															
DWF Pumping Station	118	19	-34	0	3	88	88	88	88	88	88	88	88	88	88	88	88	88	88	88	88	88	88	88	88	88	88	88	88	88	88																																	
Predicted Noise Level during Daytime Period, dB(A)						89	89	89	89	89	88	88	88	88	88	89	89	89	89	89	89	89	88	88	88	88	88	89	89	89	89	0	0	0	56	56	56	56	56	0	0	0	0	0	0	0	53	53	53	53	53	0	0	0	0	0	0	0	54	54	54	54	54

Note:

[1] Distance Correction for PMEs = $10*\log(2*PI*r^2)$

[2] The figures are rounded-up to a whole number.

Construction Noise Assessment (Unmitigated)

NSR04 Yuk Yat Garden

Activity	SWL dB(A)	Distance m	Corr. for Distance dB(A) [1][2]	Corr. for Topo	Corr. for façade dB(A)	2021							2022												2023												2024												2025												2026		
						6	7	8	9	10	11	12	1	2	3	4	5	6	7	8	9	10	11	12	1	2	3	4	5	6	7	8	9	10	11	12	1	2	3	4	5	6	7	8	9	10	11	12	1	2	3	4	5	6	7	8	9	10	11	12	1	2	3
Construction of DWFI System																																																															
Section A – A1	118	121	-50	0	3						71	71	71	71	71																																																	
Section A – A2	118	83	-46	0	3																		74	74	74	74	74																																						
Section A – A3	118	1022	-68	0	3						53	53	53	53	53																																																	
Section A – A4	118	1291	-70	0	3																		51	51	51	51	51																																					
Section B – B1	118	837	-66	0	3																																											54	54	54	54	54											
Section B – B2	118	658	-64	0	3																																																							56	56	56	56	56
Section B – B3	118	501	-62	0	3																														59	59	59	59	59																									
Construction of Rising Mains																																																															
Rising Mains	118	242	-56	0	3	65	65	65	65	65						65	65	65	65	65	65	65						65	65	65	65																																	
Construction of Pumping Station																																																															
DWF Pumping Station	118	250	-56	0	3	65	65	65	65	65	65	65	65	65	65	65	65	65	65	65	65	65	65	65	65	65	65	65	65	65	65																																	
Predicted Noise Level during Daytime Period, dB(A)						68	68	68	68	68	72	72	72	72	72	68	68	68	68	68	68	68	75	75	75	75	75	68	68	68	68	0	0	0	59	59	59	59	59	0	0	0	0	0	0	0	54	54	54	54	54	0	0	0	0	0	0	0	56	56	56	56	56

Note:

[1] Distance Correction for PMEs = $10*\log(2*PI*r^2)$

[2] The figures are rounded-up to a whole number.

Construction Noise Assessment (Unmitigated)

NSR05 Wang Fu Court

Activity	SWL dB(A)	Distance m	Corr. for Distance dB(A) [1][2]	Corr. for Topo	Corr. for façade dB(A)	2021							2022												2023												2024												2025												2026		
						6	7	8	9	10	11	12	1	2	3	4	5	6	7	8	9	10	11	12	1	2	3	4	5	6	7	8	9	10	11	12	1	2	3	4	5	6	7	8	9	10	11	12	1	2	3	4	5	6	7	8	9	10	11	12	1	2	3
Construction of DWFI System																																																															
Section A – A1	118	83	-46	0	3						74	74	74	74	74																																																	
Section A – A2	118	81	-46	0	3																		75	75	75	75	75																																						
Section A – A3	118	986	-68	0	3						53	53	53	53	53																																																	
Section A – A4	118	1249	-70	0	3																		51	51	51	51	51																																						
Section B – B1	118	805	-66	0	3																																										55	55	55	55	55											
Section B – B2	118	634	-64	0	3																																																							57	57	57	57	57
Section B – B3	118	487	-62	0	3																													59	59	59	59	59																										
Construction of Rising Mains																																																															
Rising Mains	118	208	-54	0	3	66	66	66	66	66						66	66	66	66	66	66	66						66	66	66	66																																	
Construction of Pumping Station																																																															
DWF Pumping Station	118	193	-54	0	3	68	68	68	68	68	68	68	68	68	68	68	68	68	68	68	68	68	68	68	68	68	68	68	68	68	68																																	
Predicted Noise Level during Daytime Period, dB(A)						70	70	70	70	70	75	75	75	75	75	70	70	70	70	70	70	70	75	75	75	75	75	70	70	70	70	0	0	0	59	59	59	59	59	0	0	0	0	0	0	0	55	55	55	55	55	0	0	0	0	0	0	0	57	57	57	57	57

Note:

[1] Distance Correction for PMEs = $10*\log(2*PI*r^2)$

[2] The figures are rounded-up to a whole number.

Construction Noise Assessment (Unmitigated)

NSR06 Yeung Uk San Tsuen

Activity	SWL dB(A)	Distance m	Corr. for Distance dB(A) [1][2]	Corr. for Topo	Corr. for façade dB(A)	2021							2022												2023												2024												2025												2026		
						6	7	8	9	10	11	12	1	2	3	4	5	6	7	8	9	10	11	12	1	2	3	4	5	6	7	8	9	10	11	12	1	2	3	4	5	6	7	8	9	10	11	12	1	2	3	4	5	6	7	8	9	10	11	12	1	2	3
Construction of DWFI System																																																															
Section A – A1	118	264	-56	0	3						64	64	64	64	64																																																	
Section A – A2	118	75	-45	0	3																		75	75	75	75	75																																					
Section A – A3	118	894	-67	0	3						54	54	54	54	54																																																
Section A – A4	118	1165	-69	0	3																		51	51	51	51	51																																					
Section B – B1	118	708	-65	0	3																																										56	56	56	56	56											
Section B – B2	118	528	-62	0	3																																																						58	58	58	58	58
Section B – B3	118	369	-59	0	3																													61	61	61	61	61																									
Construction of Rising Mains																																																															
Rising Mains	118	393	-60	0	3	61	61	61	61	61						61	61	61	61	61	61	61						61	61	61	61																																	
Construction of Pumping Station																																																															
DWF Pumping Station	118	393	-60	0	3	62	62	62	62	62	62	62	62	62	62	62	62	62	62	62	62	62	62	62	62	62	62	62	62	62	62																																	
Predicted Noise Level during Daytime Period, dB(A)						64	64	64	64	64	66	66	66	66	66	64	64	64	64	64	64	64	76	76	76	76	76	64	64	64	64	0	0	0	61	61	61	61	61	0	0	0	0	0	0	0	56	56	56	56	56	0	0	0	0	0	0	0	58	58	58	58	58

Note:

[1] Distance Correction for PMEs = $10*\log(2*PI*r^2)$

[2] The figures are rounded-up to a whole number.

Construction Noise Assessment (Unmitigated)

NSR07 Yuen Long Long Ping Estate Wai Chow School

Activity	SWL dB(A)	Distance m	Corr. for Distance dB(A) [1][2]	Corr. for Topo	Corr. for façade dB(A)	2021							2022												2023												2024												2025												2026		
						6	7	8	9	10	11	12	1	2	3	4	5	6	7	8	9	10	11	12	1	2	3	4	5	6	7	8	9	10	11	12	1	2	3	4	5	6	7	8	9	10	11	12	1	2	3	4	5	6	7	8	9	10	11	12	1	2	3
Construction of DWFI System																																																															
Section A – A1	118	380	-60	0	3						61	61	61	61	61																																																	
Section A – A2	118	114	-49	0	3																		72	72	72	72	72																																					
Section A – A3	118	806	-66	0	3						55	55	55	55	55																																																
Section A – A4	118	1078	-69	0	3																		52	52	52	52	52																																					
Section B – B1	118	620	-64	0	3																																										57	57	57	57	57											
Section B – B2	118	441	-61	0	3																																																						60	60	60	60	60
Section B – B3	118	284	-57	0	3																													64	64	64	64	64																									
Construction of Rising Mains																																																															
Rising Mains	118	511	-62	0	3	59	59	59	59	59						59	59	59	59	59	59	59						59	59	59	59																																	
Construction of Pumping Station																																																															
DWF Pumping Station	118	509	-62	0	3	59	59	59	59	59	59	59	59	59	59	59	59	59	59	59	59	59	59	59	59	59	59	59	59	59	59																																	
Predicted Noise Level during Daytime Period, dB(A)						62	62	62	62	62	64	64	64	64	64	62	62	62	62	62	62	62	72	72	72	72	72	62	62	62	62	0	0	0	64	64	64	64	64	0	0	0	0	0	0	0	57	57	57	57	57	0	0	0	0	0	0	0	60	60	60	60	60

Note:

[1] Distance Correction for PMEs = $10*\log(2*PI*r^2)$

[2] The figures are rounded-up to a whole number.

Construction Noise Assessment (Unmitigated)

NSR08 The Spectra

Activity	SWL dB(A)	Distance m	Corr. for Distance dB(A) [1][2]	Corr. for Topo	Corr. for façade dB(A)	2021							2022												2023												2024												2025												2026		
						6	7	8	9	10	11	12	1	2	3	4	5	6	7	8	9	10	11	12	1	2	3	4	5	6	7	8	9	10	11	12	1	2	3	4	5	6	7	8	9	10	11	12	1	2	3	4	5	6	7	8	9	10	11	12	1	2	3
Construction of DWFI System																																																																
Section A – A1	118	399	-60	0	3						61	61	61	61	61																																																		
Section A – A2	118	66	-44	0	3																		76	76	76	76	76																																						
Section A – A3	118	686	-65	0	3						56	56	56	56	56																																																	
Section A – A4	118	956	-68	0	3																		53	53	53	53	53																																					
Section B – B1	118	501	-62	0	3																																										59	59	59	59	59											
Section B – B2	118	323	-58	0	3																																																						63	63	63	63	63
Section B – B3	118	168	-52	0	3																													68	68	68	68	68																									
Construction of Rising Mains																																																																
Rising Mains	118	529	-62	0	3	58	58	58	58	58						58	58	58	58	58	58	58						58	58	58	58																																	
Construction of Pumping Station																																																																
DWF Pumping Station	118	515	-62	0	3	59	59	59	59	59	59	59	59	59	59	59	59	59	59	59	59	59	59	59	59	59	59	59	59	59	59																																	
Predicted Noise Level during Daytime Period, dB(A)						62	62	62	62	62	64	64	64	64	64	62	62	62	62	62	62	62	77	77	77	77	77	62	62	62	62	0	0	0	68	68	68	68	68	0	0	0	0	0	0	0	59	59	59	59	59	0	0	0	0	0	0	0	63	63	63	63	63

Note:

[1] Distance Correction for PMEs = $10*\log(2*PI*r^2)$

[2] The figures are rounded-up to a whole number.

Construction Noise Assessment (Unmitigated)

NSR09 Tai Kiu Tsuen

Activity	SWL dB(A)	Distance m	Corr. for Distance dB(A) [1][2]	Corr. for Topo	Corr. for façade dB(A)	2021							2022												2023												2024												2025												2026		
						6	7	8	9	10	11	12	1	2	3	4	5	6	7	8	9	10	11	12	1	2	3	4	5	6	7	8	9	10	11	12	1	2	3	4	5	6	7	8	9	10	11	12	1	2	3	4	5	6	7	8	9	10	11	12	1	2	3
Construction of DWFI System																																																															
Section A – A1	118	556	-63	0	3						58	58	58	58	58																																																	
Section A – A2	118	224	-55	0	3																		66	66	66	66	66																																						
Section A – A3	118	529	-62	0	3						58	58	58	58	58																																																	
Section A – A4	118	799	-66	0	3																		55	55	55	55	55																																						
Section B – B1	118	342	-59	0	3																																										62	62	62	62	62											
Section B – B2	118	163	-52	0	3																																																							69	69	69	69	69
Section B – B3	118	21	-34	0	3																													86	86	86	86	86																										
Construction of Rising Mains																																																															
Rising Mains	118	683	-65	0	3	56	56	56	56	56						56	56	56	56	56	56	56						56	56	56	56																																		
Construction of Pumping Station																																																															
DWF Pumping Station	118	668	-64	0	3	57	57	57	57	57	57	57	57	57	57	57	57	57	57	57	57	57	57	57	57	57	57	57	57	57	57																																	
Predicted Noise Level during Daytime Period, dB(A)						60	60	60	60	60	63	63	63	63	63	60	60	60	60	60	60	60	67	67	67	67	67	60	60	60	60	0	0	0	86	86	86	86	86	0	0	0	0	0	0	0	62	62	62	62	62	0	0	0	0	0	0	0	69	69	69	69	69

Note:

[1] Distance Correction for PMEs = $10*\log(2*PI*r^2)$

[2] The figures are rounded-up to a whole number.

Construction Noise Assessment (Unmitigated)

NSR10 Fuk Yip Building

Activity	SWL dB(A)	Distance m	Corr. for Distance dB(A) [1][2]	Corr. for Topo	Corr. for façade dB(A)	2021							2022												2023												2024												2025												2026		
						6	7	8	9	10	11	12	1	2	3	4	5	6	7	8	9	10	11	12	1	2	3	4	5	6	7	8	9	10	11	12	1	2	3	4	5	6	7	8	9	10	11	12	1	2	3	4	5	6	7	8	9	10	11	12	1	2	3
Construction of DWFI System																																																															
Section A – A1	118	719	-65	0	3						56	56	56	56	56																																																	
Section A – A2	118	386	-60	0	3																		61	61	61	61	61																																						
Section A – A3	118	373	-59	0	3						61	61	61	61	61																																																	
Section A – A4	118	645	-64	0	3																		57	57	57	57	57																																						
Section B – B1	118	187	-53	0	3																																										67	67	67	67	67											
Section B – B2	118	16	-32	0	3																																																						89	89	89	89	89
Section B – B3	118	83	-46	0	3																													74	74	74	74	74																									
Construction of Rising Mains																																																															
Rising Mains	118	845	-67	0	3	54	54	54	54	54						54	54	54	54	54	54	54						54	54	54	54																																	
Construction of Pumping Station																																																															
DWF Pumping Station	118	830	-66	0	3	55	55	55	55	55	55	55	55	55	55	55	55	55	55	55	55	55	55	55	55	55	55	55	55	55	55																																	
Predicted Noise Level during Daytime Period, dB(A)						58	58	58	58	58	63	63	63	63	63	58	58	58	58	58	58	58	63	63	63	63	63	58	58	58	58	0	0	0	74	74	74	74	74	0	0	0	0	0	0	0	67	67	67	67	67	0	0	0	0	0	0	0	89	89	89	89	89

Note:

[1] Distance Correction for PMEs = $10*\log(2*PI*r^2)$

[2] The figures are rounded-up to a whole number.

Construction Noise Assessment (Unmitigated)

NSR11 Yuen Fat House

Activity	SWL dB(A)	Distance m	Corr. for Distance dB(A) [1][2]	Corr. for Topo	Corr. for façade dB(A)	2021							2022												2023												2024												2025												2026		
						6	7	8	9	10	11	12	1	2	3	4	5	6	7	8	9	10	11	12	1	2	3	4	5	6	7	8	9	10	11	12	1	2	3	4	5	6	7	8	9	10	11	12	1	2	3	4	5	6	7	8	9	10	11	12	1	2	3
Construction of DWFI System																																																															
Section A – A1	118	790	-66	0	3						55	55	55	55	55																																																	
Section A – A2	118	468	-61	0	3																		59	59	59	59	59																																					
Section A – A3	118	284	-57	0	3						64	64	64	64	64																																																	
Section A – A4	118	554	-63	0	3																		58	58	58	58	58																																					
Section B – B1	118	98	-48	0	3																																											73	73	73	73	73											
Section B – B2	118	15	-32	0	3																																																							89	89	89	89	89
Section B – B3	118	172	-53	0	3																													68	68	68	68	68																									
Construction of Rising Mains																																																															
Rising Mains	118	911	-67	0	3	54	54	54	54	54						54	54	54	54	54	54	54						54	54	54	54																																	
Construction of Pumping Station																																																															
DWF Pumping Station	118	895	-67	0	3	54	54	54	54	54	54	54	54	54	54	54	54	54	54	54	54	54	54	54	54	54	54	54	54	54	54																																	
Predicted Noise Level during Daytime Period, dB(A)						57	57	57	57	57	65	65	65	65	65	57	57	57	57	57	57	57	62	62	62	62	62	57	57	57	57	0	0	0	68	68	68	68	68	0	0	0	0	0	0	0	73	73	73	73	73	0	0	0	0	0	0	0	89	89	89	89	89

Note:

[1] Distance Correction for PMEs = $10*\log(2*PI*r^2)$

[2] The figures are rounded-up to a whole number.

Construction Noise Assessment (Unmitigated)

NSR12 Healey Building

Activity	SWL dB(A)	Distance m	Corr. for Distance dB(A) [1][2]	Corr. for Topo	Corr. for façade dB(A)	2021							2022												2023												2024												2025												2026		
						6	7	8	9	10	11	12	1	2	3	4	5	6	7	8	9	10	11	12	1	2	3	4	5	6	7	8	9	10	11	12	1	2	3	4	5	6	7	8	9	10	11	12	1	2	3	4	5	6	7	8	9	10	11	12	1	2	3
Construction of DWFI System																																																															
Section A – A1	118	822	-66	0	3						54	54	54	54	54																																																	
Section A – A2	118	494	-62	0	3																		59	59	59	59	59																																						
Section A – A3	118	265	-56	0	3						64	64	64	64	64																																																	
Section A – A4	118	537	-63	0	3																		58	58	58	58	58																																						
Section B – B1	118	79	-46	0	3																																										75	75	75	75	75												
Section B – B2	118	29	-37	0	3																																																						83	83	83	83	83
Section B – B3	118	191	-54	0	3																													67	67	67	67	67																									
Construction of Rising Mains																																																															
Rising Mains	118	946	-67	0	3	53	53	53	53	53						53	53	53	53	53	53	53						53	53	53	53																																	
Construction of Pumping Station																																																															
DWF Pumping Station	118	930	-67	0	3	54	54	54	54	54	54	54	54	54	54	54	54	54	54	54	54	54	54	54	54	54	54	54	54	54	54																																	
Predicted Noise Level during Daytime Period, dB(A)						57	57	57	57	57	65	65	65	65	65	57	57	57	57	57	57	57	62	62	62	62	62	57	57	57	57	0	0	0	67	67	67	67	67	0	0	0	0	0	0	0	75	75	75	75	75	0	0	0	0	0	0	0	83	83	83	83	83

Note:

[1] Distance Correction for PMEs = $10*\log(2*PI*r^2)$

[2] The figures are rounded-up to a whole number.

Construction Noise Assessment (Unmitigated)

NSR13 Wah Shing Mansion

Activity	SWL dB(A)	Distance m	Corr. for Distance dB(A) [1][2]	Corr. for Topo	Corr. for façade dB(A)	2021							2022												2023												2024												2025												2026		
						6	7	8	9	10	11	12	1	2	3	4	5	6	7	8	9	10	11	12	1	2	3	4	5	6	7	8	9	10	11	12	1	2	3	4	5	6	7	8	9	10	11	12	1	2	3	4	5	6	7	8	9	10	11	12	1	2	3
Construction of DWFI System																																																															
Section A – A1	118	885	-67	0	3						54	54	54	54	54																																																	
Section A – A2	118	558	-63	0	3																		58	58	58	58	58																																					
Section A – A3	118	201	-54	0	3						67	67	67	67	67																																																	
Section A – A4	118	473	-61	0	3																		59	59	59	59	59																																					
Section B – B1	118	24	-36	0	3																																										85	85	85	85	85											
Section B – B2	118	91	-47	0	3																																																						74	74	74	74	74
Section B – B3	118	256	-56	0	3																													65	65	65	65	65																									
Construction of Rising Mains																																																															
Rising Mains	118	1007	-68	0	3	53	53	53	53	53						53	53	53	53	53	53	53						53	53	53	53																																	
Construction of Pumping Station																																																															
DWF Pumping Station	118	992	-68	0	3	54	54	54	54	54	54	54	54	54	54	54	54	54	54	54	54	54	54	54	54	54	54	54	54	54	54																																	
Predicted Noise Level during Daytime Period, dB(A)						56	56	56	56	56	67	67	67	67	67	56	56	56	56	56	56	56	62	62	62	62	62	56	56	56	56	0	0	0	65	65	65	65	65	0	0	0	0	0	0	0	85	85	85	85	85	0	0	0	0	0	0	0	74	74	74	74	74

Note:

[1] Distance Correction for PMEs = $10*\log(2*PI*r^2)$

[2] The figures are rounded-up to a whole number.

Construction Noise Assessment (Unmitigated)

NSR14 CCC Chun Kwong Primary School

Activity	SWL dB(A)	Distance m	Corr. for Distance dB(A) [1][2]	Corr. for Topo	Corr. for façade dB(A)	2021							2022												2023												2024												2025												2026		
						6	7	8	9	10	11	12	1	2	3	4	5	6	7	8	9	10	11	12	1	2	3	4	5	6	7	8	9	10	11	12	1	2	3	4	5	6	7	8	9	10	11	12	1	2	3	4	5	6	7	8	9	10	11	12	1	2	3
Construction of DWFI System																																																															
Section A – A1	118	907	-67	0	3						54	54	54	54	54																																																	
Section A – A2	118	590	-63	0	3																		57	57	57	57	57																																						
Section A – A3	118	154	-52	0	3						69	69	69	69	69																																																	
Section A – A4	118	424	-61	0	3																		60	60	60	60	60																																						
Section B – B1	118	25	-36	0	3																																										85	85	85	85	85											
Section B – B2	118	137	-51	0	3																																																							70	70	70	70	70
Section B – B3	118	394	-60	0	3																													61	61	61	61	61																										
Construction of Rising Mains																																																															
Rising Mains	118	1026	-68	0	3	53	53	53	53	53						53	53	53	53	53	53	53						53	53	53	53																																		
Construction of Pumping Station																																																															
DWF Pumping Station	118	1010	-68	0	3	53	53	53	53	53	53	53	53	53	53	53	53	53	53	53	53	53	53	53	53	53	53	53	53	53	53																																	
Predicted Noise Level during Daytime Period, dB(A)						56	56	56	56	56	69	69	69	69	69	56	56	56	56	56	56	56	63	63	63	63	63	56	56	56	56	0	0	0	61	61	61	61	61	0	0	0	0	0	0	0	85	85	85	85	85	0	0	0	0	0	0	0	70	70	70	70	70

Note:

[1] Distance Correction for PMEs = $10*\log(2*PI*r^2)$

[2] The figures are rounded-up to a whole number.

Construction Noise Assessment (Unmitigated)

NSR15 Tse King House

Activity	SWL dB(A)	Distance m	Corr. for Distance dB(A) [1][2]	Corr. for Topo	Corr. for façade dB(A)	2021							2022												2023												2024												2025												2026		
						6	7	8	9	10	11	12	1	2	3	4	5	6	7	8	9	10	11	12	1	2	3	4	5	6	7	8	9	10	11	12	1	2	3	4	5	6	7	8	9	10	11	12	1	2	3	4	5	6	7	8	9	10	11	12	1	2	3
Construction of DWFI System																																																															
Section A – A1	118	1045	-68	0	3						52	52	52	52	52																																																	
Section A – A2	118	722	-65	0	3																		56	56	56	56	56																																					
Section A – A3	118	45	-41	0	3						80	80	80	80	80																																																	
Section A – A4	118	310	-58	0	3																		63	63	63	63	63																																					
Section B – B1	118	84	-47	0	3																																										74	74	74	74	74											
Section B – B2	118	255	-56	0	3																																																						65	65	65	65	65
Section B – B3	118	421	-60	0	3																													60	60	60	60	60																									
Construction of Rising Mains																																																															
Rising Mains	118	1165	-69	0	3	51	51	51	51	51						51	51	51	51	51	51	51						51	51	51	51																																	
Construction of Pumping Station																																																															
DWF Pumping Station	118	1149	-69	0	3	52	52	52	52	52	52	52	52	52	52	52	52	52	52	52	52	52	52	52	52	52	52	52	52	52	52																																	
Predicted Noise Level during Daytime Period, dB(A)						55	55	55	55	55	80	80	80	80	80	55	55	55	55	55	55	55	64	64	64	64	64	55	55	55	55	0	0	0	60	60	60	60	60	0	0	0	0	0	0	0	74	74	74	74	74	0	0	0	0	0	0	0	65	65	65	65	65

Note:

[1] Distance Correction for PMEs = $10*\log(2*PI*r^2)$

[2] The figures are rounded-up to a whole number.

Construction Noise Assessment (Unmitigated)

NSR16 On Ning Building

Activity	SWL dB(A)	Distance m	Corr. for Distance dB(A) [1][2]	Corr. for Topo	Corr. for façade dB(A)	2021							2022												2023												2024												2025												2026		
						6	7	8	9	10	11	12	1	2	3	4	5	6	7	8	9	10	11	12	1	2	3	4	5	6	7	8	9	10	11	12	1	2	3	4	5	6	7	8	9	10	11	12	1	2	3	4	5	6	7	8	9	10	11	12	1	2	3
Construction of DWFI System																																																															
Section A – A1	118	1106	-69	0	3						52	52	52	52	52																																																	
Section A – A2	118	784	-66	0	3																		55	55	55	55	55																																					
Section A – A3	118	34	-39	0	3						82	82	82	82	82																																																	
Section A – A4	118	248	-56	0	3																		65	65	65	65	65																																					
Section B – B1	118	145	-51	0	3																																										70	70	70	70	70											
Section B – B2	118	318	-58	0	3																																																						63	63	63	63	63
Section B – B3	118	484	-62	0	3																													59	59	59	59	59																									
Construction of Rising Mains																																																															
Rising Mains	118	1225	-70	0	3	51	51	51	51	51						51	51	51	51	51	51	51						51	51	51	51																																	
Construction of Pumping Station																																																															
DWF Pumping Station	118	1209	-70	0	3	52	52	52	52	52	52	52	52	52	52	52	52	52	52	52	52	52	52	52	52	52	52	52	52	52	52																																	
Predicted Noise Level during Daytime Period, dB(A)						54	54	54	54	54	82	82	82	82	82	54	54	54	54	54	54	54	65	65	65	65	65	54	54	54	54	0	0	0	59	59	59	59	59	0	0	0	0	0	0	0	70	70	70	70	70	0	0	0	0	0	0	0	63	63	63	63	63

Note:

[1] Distance Correction for PMEs = $10*\log(2*PI*r^2)$

[2] The figures are rounded-up to a whole number.

Construction Noise Assessment (Unmitigated)

NSR17 Ho Wang Building

Activity	SWL dB(A)	Distance m	Corr. for Distance dB(A) [1][2]	Corr. for Topo	Corr. for façade dB(A)	2021							2022												2023												2024												2025												2026		
						6	7	8	9	10	11	12	1	2	3	4	5	6	7	8	9	10	11	12	1	2	3	4	5	6	7	8	9	10	11	12	1	2	3	4	5	6	7	8	9	10	11	12	1	2	3	4	5	6	7	8	9	10	11	12	1	2	3
Construction of DWFI System																																																															
Section A – A1	118	1109	-69	0	3						52	52	52	52	52																																																	
Section A – A2	118	795	-66	0	3																		55	55	55	55	55																																					
Section A – A3	118	16	-32	0	3						89	89	89	89	89																																																	
Section A – A4	118	227	-55	0	3																		66	66	66	66	66																																					
Section B – B1	118	159	-52	0	3																																										69	69	69	69	69											
Section B – B2	118	333	-58	0	3																																																						62	62	62	62	62
Section B – B3	118	499	-62	0	3																													59	59	59	59	59	59																									
Construction of Rising Mains																																																															
Rising Mains	118	1224	-70	0	3	51	51	51	51	51						51	51	51	51	51	51	51						51	51	51	51																																	
Construction of Pumping Station																																																															
DWF Pumping Station	118	1208	-70	0	3	52	52	52	52	52	52	52	52	52	52	52	52	52	52	52	52	52	52	52	52	52	52	52	52	52	52																																	
Predicted Noise Level during Daytime Period, dB(A)						54	54	54	54	54	89	89	89	89	89	54	54	54	54	54	54	54	66	66	66	66	66	54	54	54	54	0	0	0	59	59	59	59	59	0	0	0	0	0	0	0	69	69	69	69	69	0	0	0	0	0	0	0	62	62	62	62	62

Note:

[1] Distance Correction for PMEs = $10*\log(2*PI*r^2)$

[2] The figures are rounded-up to a whole number.

Construction Noise Assessment (Unmitigated)

NSR18 Caritas Yuen Long Chan Chun Ha Secondary School

Activity	SWL dB(A)	Distance m	Corr. for Distance dB(A) [1][2]	Corr. for Topo	Corr. for façade dB(A)	2021							2022												2023												2024												2025												2026		
						6	7	8	9	10	11	12	1	2	3	4	5	6	7	8	9	10	11	12	1	2	3	4	5	6	7	8	9	10	11	12	1	2	3	4	5	6	7	8	9	10	11	12	1	2	3	4	5	6	7	8	9	10	11	12	1	2	3
Construction of DWFI System																																																																
Section A – A1	118	1201	-70	0	3						51	51	51	51	51																																																		
Section A – A2	118	890	-67	0	3																		54	54	54	54	54																																						
Section A – A3	118	43	-41	0	3						80	80	80	80	80																																																		
Section A – A4	118	132	-50	0	3																		70	70	70	70	70																																						
Section B – B1	118	254	-56	0	3																																										65	65	65	65	65												
Section B – B2	118	428	-61	0	3																																																							60	60	60	60	60
Section B – B3	118	594	-63	0	3																													57	57	57	57	57	57																										
Construction of Rising Mains																																																																
Rising Mains	118	1315	-70	0	3	50	50	50	50	50						50	50	50	50	50	50	50						50	50	50	50																																		
Construction of Pumping Station																																																																
DWF Pumping Station	118	1230	-70	0	3	52	52	52	52	52	52	52	52	52	52	52	52	52	52	52	52	52	52	52	52	52	52	52	52	52	52																																	
Predicted Noise Level during Daytime Period, dB(A)						54	54	54	54	54	80	80	80	80	80	54	54	54	54	54	54	54	71	71	71	71	71	54	54	54	54	0	0	0	57	57	57	57	57	0	0	0	0	0	0	0	65	65	65	65	65	0	0	0	0	0	0	0	60	60	60	60	60

Note:

[1] Distance Correction for PMEs = $10*\log(2*PI*r^2)$

[2] The figures are rounded-up to a whole number.

Construction Noise Assessment (Unmitigated)

NSR19 Sun Fai Court

Activity	SWL dB(A)	Distance m	Corr. for Distance dB(A) [1][2]	Corr. for Topo	Corr. for façade dB(A)	2021							2022												2023												2024												2025												2026		
						6	7	8	9	10	11	12	1	2	3	4	5	6	7	8	9	10	11	12	1	2	3	4	5	6	7	8	9	10	11	12	1	2	3	4	5	6	7	8	9	10	11	12	1	2	3	4	5	6	7	8	9	10	11	12	1	2	3
Construction of DWFI System																																																															
Section A – A1	118	1336	-70	0	3						50	50	50	50	50																																																	
Section A – A2	118	1023	-68	0	3																		53	53	53	53	53																																						
Section A – A3	118	143	-51	0	3						70	70	70	70	70																																																	
Section A – A4	118	15	-31	0	3																		89	89	89	89	89																																						
Section B – B1	118	385	-60	0	3																																										61	61	61	61	61											
Section B – B2	118	559	-63	0	3																																																						58	58	58	58	58
Section B – B3	118	725	-65	0	3																													56	56	56	56	56																										
Construction of Rising Mains																																																															
Rising Mains	118	1450	-71	0	3	50	50	50	50	50						50	50	50	50	50	50	50						50	50	50	50																																		
Construction of Pumping Station																																																															
DWF Pumping Station	118	1434	-71	0	3	50	50	50	50	50	50	50	50	50	50	50	50	50	50	50	50	50	50	50	50	50	50	50	50	50	50																																	
Predicted Noise Level during Daytime Period, dB(A)						53	53	53	53	53	70	70	70	70	70	53	53	53	53	53	53	53	89	89	89	89	89	53	53	53	53	0	0	0	56	56	56	56	56	0	0	0	0	0	0	0	61	61	61	61	61	0	0	0	0	0	0	0	58	58	58	58	58

Note:

[1] Distance Correction for PMEs = $10*\log(2*PI*r^2)$

[2] The figures are rounded-up to a whole number.

Construction Noise Assessment (Unmitigated)

NSR20 Ma Tin Tsuen - Kung Um Road

Activity	SWL dB(A)	Distance m	Corr. for Distance dB(A) [1][2]	Corr. for Topo	Corr. for façade dB(A)	2021							2022												2023												2024												2025												2026		
						6	7	8	9	10	11	12	1	2	3	4	5	6	7	8	9	10	11	12	1	2	3	4	5	6	7	8	9	10	11	12	1	2	3	4	5	6	7	8	9	10	11	12	1	2	3	4	5	6	7	8	9	10	11	12	1	2	3
Construction of DWFI System																																																																
Section A – A1	118	1430	-71	0	3						50	50	50	50	50																																																		
Section A – A2	118	1119	-69	0	3																		52	52	52	52	52																																						
Section A – A3	118	240	-56	0	3						65	65	65	65	65																																																		
Section A – A4	118	20	-34	0	3																		87	87	87	87	87																																						
Section B – B1	118	482	-62	0	3																																										59	59	59	59	59											
Section B – B2	118	656	-64	0	3																																																						56	56	56	56	56
Section B – B3	118	822	-66	0	3																													54	54	54	54	54																									
Construction of Rising Mains																																																																
Rising Mains	118	1543	-72	0	3	49	49	49	49	49						49	49	49	49	49	49	49						49	49	49	49																																		
Construction of Pumping Station																																																																
DWF Pumping Station	118	1527	-72	0	3	50	50	50	50	50	50	50	50	50	50	50	50	50	50	50	50	50	50	50	50	50	50	50	50	50	50																																		
Predicted Noise Level during Daytime Period, dB(A)						52	52	52	52	52	65	65	65	65	65	52	52	52	52	52	52	52	87	87	87	87	87	52	52	52	52	0	0	0	54	54	54	54	54	0	0	0	0	0	0	0	59	59	59	59	59	0	0	0	0	0	0	0	56	56	56	56	56

Note:

[1] Distance Correction for PMEs = $10*\log(2*PI*r^2)$

[2] The figures are rounded-up to a whole number.

Construction Noise Assessment (Unmitigated)

NSR21 Yuen Long Villa

Activity	SWL dB(A)	Distance m	Corr. for Distance dB(A) [1][2]	Corr. for Topo	Corr. for façade dB(A)	2021							2022												2023												2024												2025												2026		
						6	7	8	9	10	11	12	1	2	3	4	5	6	7	8	9	10	11	12	1	2	3	4	5	6	7	8	9	10	11	12	1	2	3	4	5	6	7	8	9	10	11	12	1	2	3	4	5	6	7	8	9	10	11	12	1	2	3
Construction of DWFI System																																																															
Section A – A1	118	1397	-71	0	3						50	50	50	50	50																																																	
Section A – A2	118	1090	-69	0	3																		52	52	52	52	52																																						
Section A – A3	118	216	-55	0	3						66	66	66	66	66																																																	
Section A – A4	118	17	-33	0	3																		88	88	88	88	88																																						
Section B – B1	118	456	-61	0	3																																										60	60	60	60	60											
Section B – B2	118	630	-64	0	3																																																						57	57	57	57	57
Section B – B3	118	796	-66	0	3																													55	55	55	55	55																									
Construction of Rising Mains																																																															
Rising Mains	118	1507	-72	0	3	49	49	49	49	49						49	49	49	49	49	49	49						49	49	49	49																																	
Construction of Pumping Station																																																															
DWF Pumping Station	118	1492	-71	0	3	50	50	50	50	50	50	50	50	50	50	50	50	50	50	50	50	50	50	50	50	50	50	50	50	50	50																																	
Predicted Noise Level during Daytime Period, dB(A)						53	53	53	53	53	66	66	66	66	66	53	53	53	53	53	53	53	88	88	88	88	88	53	53	53	53	0	0	0	55	55	55	55	55	0	0	0	0	0	0	0	60	60	60	60	60	0	0	0	0	0	0	0	57	57	57	57	57

Note:

[1] Distance Correction for PMEs = $10*\log(2*PI*r^2)$

[2] The figures are rounded-up to a whole number.

Construction Noise Assessment (Unmitigated)

NSR22 Lung Tin Tsuen

Activity	SWL dB(A)	Distance m	Corr. for Distance dB(A) [1][2]	Corr. for Topo	Corr. for façade dB(A)	2021							2022												2023												2024												2025												2026		
						6	7	8	9	10	11	12	1	2	3	4	5	6	7	8	9	10	11	12	1	2	3	4	5	6	7	8	9	10	11	12	1	2	3	4	5	6	7	8	9	10	11	12	1	2	3	4	5	6	7	8	9	10	11	12	1	2	3
Construction of DWFI System																																																																
Section A – A1	118	1539	-72	0	3						49	49	49	49	49																																																		
Section A – A2	118	1227	-70	0	3																		51	51	51	51	51																																						
Section A – A3	118	347	-59	0	3						62	62	62	62	62																																																		
Section A – A4	118	94	-47	0	3																		73	73	73	73	73																																						
Section B – B1	118	589	-63	0	3																																										57	57	57	57	57												
Section B – B2	118	763	-66	0	3																																																						55	55	55	55	55
Section B – B3	118	929	-67	0	3																													53	53	53	53	53																										
Construction of Rising Mains																																																																
Rising Mains	118	1652	-72	0	3	48	48	48	48	48						48	48	48	48	48	48	48						48	48	48	48																																		
Construction of Pumping Station																																																																
DWF Pumping Station	118	1636	-72	0	3	49	49	49	49	49	49	49	49	49	49	49	49	49	49	49	49	49	49	49	49	49	49	49	49	49	49																																		
Predicted Noise Level during Daytime Period, dB(A)						52	52	52	52	52	62	62	62	62	62	52	52	52	52	52	52	52	73	73	73	73	73	52	52	52	52	0	0	0	53	53	53	53	53	0	0	0	0	0	0	0	57	57	57	57	57	0	0	0	0	0	0	0	55	55	55	55	55

Note:

[1] Distance Correction for PMEs = $10*\log(2*PI*r^2)$

[2] The figures are rounded-up to a whole number.

Construction Noise Assessment (Unmitigated)

NSR23 Wang Chau Lam Uk Tsuen

Activity	SWL dB(A)	Distance m	Corr. for Distance dB(A) [1][2]	Corr. for Topo	Corr. for façade dB(A)	2021							2022												2023												2024												2025												2026		
						6	7	8	9	10	11	12	1	2	3	4	5	6	7	8	9	10	11	12	1	2	3	4	5	6	7	8	9	10	11	12	1	2	3	4	5	6	7	8	9	10	11	12	1	2	3	4	5	6	7	8	9	10	11	12	1	2	3
Construction of DWFI System																																																															
Section A – A1	118	85	-47	0	3						74	74	74	74	74																																																	
Section A – A2	118	233	-55	0	3																		65	65	65	65	65																																						
Section A – A3	118	1180	-69	0	3						51	51	51	51	51																																																	
Section A – A4	118	1446	-71	0	3																		50	50	50	50	50																																					
Section B – B1	118	996	-68	0	3																																										53	53	53	53	53											
Section B – B2	118	820	-66	0	3																																																						55	55	55	55	55
Section B – B3	118	665	-64	0	3																													56	56	56	56	56																									
Construction of Rising Mains																																																															
Rising Mains	118	100	-48	0	3	73	73	73	73	73						73	73	73	73	73	73	73						73	73	73	73																																	
Construction of Pumping Station																																																															
DWF Pumping Station	118	145	-51	0	3	70	70	70	70	70	70	70	70	70	70	70	70	70	70	70	70	70	70	70	70	70	70	70	70	70	70																																	
Predicted Noise Level during Daytime Period, dB(A)						75	75	75	75	75	76	76	76	76	76	75	75	75	75	75	75	75	72	72	72	72	72	75	75	75	75	0	0	0	56	56	56	56	56	0	0	0	0	0	0	0	53	53	53	53	53	0	0	0	0	0	0	0	55	55	55	55	55

Note:

[1] Distance Correction for PMEs = $10*\log(2*PI*r^2)$

[2] The figures are rounded-up to a whole number.

Construction Noise Assessment (Unmitigated)

NSR24 Wang Chau Tung Tau Wai

Activity	SWL dB(A)	Distance m	Corr. for Distance dB(A) [1][2]	Corr. for Topo	Corr. for façade dB(A)	2021							2022												2023												2024												2025												2026		
						6	7	8	9	10	11	12	1	2	3	4	5	6	7	8	9	10	11	12	1	2	3	4	5	6	7	8	9	10	11	12	1	2	3	4	5	6	7	8	9	10	11	12	1	2	3	4	5	6	7	8	9	10	11	12	1	2	3
Construction of DWFI System																																																																
Section A – A1	118	128	-50	0	3						71	71	71	71	71																																																		
Section A – A2	118	294	-57	0	3																		63	63	63	63	63																																						
Section A – A3	118	1242	-70	0	3						51	51	51	51	51																																																	
Section A – A4	118	1508	-72	0	3																		49	49	49	49	49																																						
Section B – B1	118	1058	-68	0	3																																										52	52	52	52	52											
Section B – B2	118	881	-67	0	3																																																						54	54	54	54	54
Section B – B3	118	726	-65	0	3																													56	56	56	56	56																										
Construction of Rising Mains																																																																
Rising Mains	118	103	-48	0	3	73	73	73	73	73						73	73	73	73	73	73	73						73	73	73	73																																		
Construction of Pumping Station																																																																
DWF Pumping Station	118	161	-52	0	3	69	69	69	69	69	69	69	69	69	69	69	69	69	69	69	69	69	69	69	69	69	69	69	69	69	69																																		
Predicted Noise Level during Daytime Period, dB(A)						74	74	74	74	74	73	73	73	73	73	74	74	74	74	74	74	74	70	70	70	70	70	74	74	74	74	0	0	0	56	56	56	56	56	0	0	0	0	0	0	0	52	52	52	52	52	0	0	0	0	0	0	0	54	54	54	54	54

Note:

[1] Distance Correction for PMEs = $10*\log(2*PI*r^2)$

[2] The figures are rounded-up to a whole number.

Construction Noise Assessment (Unmitigated)

NSR25 Hong Kong School of Motoring - Yuen Long Road Safety Centre

Activity	SWL dB(A)	Distance m	Corr. for Distance dB(A) [1][2]	Corr. for Topo	Corr. for façade dB(A)	2021							2022												2023												2024												2025												2026		
						6	7	8	9	10	11	12	1	2	3	4	5	6	7	8	9	10	11	12	1	2	3	4	5	6	7	8	9	10	11	12	1	2	3	4	5	6	7	8	9	10	11	12	1	2	3	4	5	6	7	8	9	10	11	12	1	2	3
Construction of DWFI System																																																															
Section A – A1	118	505	-62	0	3						59	59	59	59	59																																																	
Section A – A2	118	702	-65	0	3																		56	56	56	56	56																																						
Section A – A3	118	1538	-72	0	3						49	49	49	49	49																																																	
Section A – A4	118	1779	-73	0	3																		48	48	48	48	48																																						
Section B – B1	118	1374	-71	0	3																																										50	50	50	50	50											
Section B – B2	118	1221	-70	0	3																																																						51	51	51	51	51
Section B – B3	118	1092	-69	0	3																													52	52	52	52	52																									
Construction of Rising Mains																																																															
Rising Mains	118	256	-56	0	3	65	65	65	65	65						65	65	65	65	65	65	65						65	65	65	65																																		
Construction of Pumping Station																																																															
DWF Pumping Station	118	423	-61	0	3	61	61	61	61	61	61	61	61	61	61	61	61	61	61	61	61	61	61	61	61	61	61	61	61	61	61																																	
Predicted Noise Level during Daytime Period, dB(A)						66	66	66	66	66	63	63	63	63	63	66	66	66	66	66	66	66	62	62	62	62	62	66	66	66	66	0	0	0	52	52	52	52	52	0	0	0	0	0	0	0	50	50	50	50	50	0	0	0	0	0	0	0	51	51	51	51	51

Note:

[1] Distance Correction for PMEs = $10*\log(2*PI*r^2)$

[2] The figures are rounded-up to a whole number.

Construction Noise Assessment (Unmitigated)

R1 Sol City (Planned)

Activity	SWL dB(A)	Distance m	Corr. for Distance dB(A) [1][2]	Corr. for Topo	Corr. for façade dB(A)	2021							2022												2023												2024												2025												2026		
						6	7	8	9	10	11	12	1	2	3	4	5	6	7	8	9	10	11	12	1	2	3	4	5	6	7	8	9	10	11	12	1	2	3	4	5	6	7	8	9	10	11	12	1	2	3	4	5	6	7	8	9	10	11	12	1	2	3
Construction of DWFI System																																																															
Section A – A1	118	633	-64	0	3						57	57	57	57	57																																																	
Section A – A2	118	293	-57	0	3																		63	63	63	63	63																																					
Section A – A3	118	470	-61	0	3						59	59	59	59	59																																																	
Section A – A4	118	742	-65	0	3																		55	55	55	55	55																																					
Section B – B1	118	283	-57	0	3																																											64	64	64	64	64											
Section B – B2	118	105	-48	0	3																																																							72	72	72	72	72
Section B – B3	118	24	-35	0	3																														85	85	85	85	85																									
Construction of Rising Mains																																																															
Rising Mains	118	762	-66	0	3	55	55	55	55	55						55	55	55	55	55	55	55						55	55	55	55																																	
Construction of Pumping Station																																																															
DWF Pumping Station	118	747	-65	0	3	56	56	56	56	56	56	56	56	56	56	56	56	56	56	56	56	56	56	56	56	56	56	56	56	56	56																																	
Predicted Noise Level during Daytime Period, dB(A)						59	59	59	59	59	62	62	62	62	62	59	59	59	59	59	59	59	65	65	65	65	65	59	59	59	59	0	0	0	85	85	85	85	85	0	0	0	0	0	0	0	64	64	64	64	64	0	0	0	0	0	0	0	72	72	72	72	72

Note:

[1] Distance Correction for PMEs = $10*\log(2*PI*r^2)$

[2] The figures are rounded-up to a whole number.

Annex 5C-3: Operational Noise Assessment of the Proposed Dry Weather Flow (DWFl) Pumping Station

NSR	Items	Number of Items	Sound Power Level (SWL)/Item, dB(A)	Total SWL, dB(A)	Distance (D)[3], m	Corrections, dB(A)				Individual SPL, dB(A)	Total SPL from each pumping station, dB(A)	ASR [5]	EIAO-TM Noise Criterion (ANL-5), dB(A)	Measured Minimum Background Noise Level, dB(A)	Applicable Noise Limit[6], dB(A)	Compliance [Y/N]
						Screening[4]	Distance	Tonality	Façade							
NSR 1	**Proposed DWF pumping station:**															
	Mechanical screens[1]	2	89	92	148	-20	-51.4	3	3	26.6						
	Submersible pumps[2]	2	85	88	148	-20	-51.4	3	3	22.6						
	Exhaust fan for deodourizer[2] - Northwest facing	1	73	73	148	0	-51.4	3	3	27.6						
	Exhaust fan for ventilation[2] - Northeast facing	1	73	73	148	0	-51.4	3	3	27.6	33	B	50	48	48	Y
NSR 2	**Proposed DWF pumping station:**															
	Mechanical screens[1]	2	89	92	96	-20	-47.6	3	3	30.4						
	Submersible pumps[2]	2	85	88	96	-20	-47.6	3	3	26.4						
	Exhaust fan for deodourizer[2] - Northwest facing	1	73	73	96	-10	-47.6	3	3	21.4						
	Exhaust fan for ventilation[2] - Northeast facing	1	73	73	96	-10	-47.6	3	3	21.4	33	B	50	48	48	Y
NSR 3	**Proposed DWF pumping station:**															
	Mechanical screens[1]	2	89	92	22	-20	-34.8	3	3	43.2						
	Submersible pumps[2]	2	85	88	22	-20	-34.8	3	3	39.2						
	Exhaust fan for deodourizer[2] - Northwest facing	1	73	73	22	-10	-34.8	3	3	34.2						
	Exhaust fan for ventilation[2] - Northeast facing	1	73	73	22	-10	-34.8	3	3	34.2	45	B	50	48	48	Y
NSR4	**Proposed DWF pumping station:**															
	Mechanical screens[1]	2	89	92	247	-20	-55.8	3	3	22.2						
	Submersible pumps[2]	2	85	88	247	-20	-55.8	3	3	18.2						
	Exhaust fan for deodourizer[2] - Northwest facing	1	73	73	247	0	-55.8	3	3	23.2						
	Exhaust fan for ventilation[2] - Northeast facing	1	73	73	247	-10	-55.8	3	3	13.2	27	A	45	48	45	Y
NSR5	**Proposed DWF pumping station:**															
	Mechanical screens[1]	2	89	92	190	-20	-53.6	3	3	24.5						
	Submersible pumps[2]	2	85	88	190	-20	-53.6	3	3	20.5						
	Exhaust fan for deodourizer[2] - Northwest facing	1	73	73	190	-10	-53.6	3	3	15.4						
	Exhaust fan for ventilation[2] - Northeast facing	1	73	73	190	-10	-53.6	3	3	15.4	27	A	45	48	45	Y
NSR23	**Proposed DWF pumping station:**															
	Mechanical screens[1]	2	89	92	142	-20	-51.0	3	3	27.0						
	Submersible pumps[2]	2	85	88	142	-20	-51.0	3	3	23.0						
	Exhaust fan for deodourizer[2] - Northwest facing	1	73	73	142	0	-51.0	3	3	28.0						
	Exhaust fan for ventilation[2] - Northeast facing	1	73	73	142	-10	-51.0	3	3	18.0	31	A	45	48	45	Y
NSR24	**Proposed DWF pumping station:**															
	Mechanical screens[1]	2	89	92	160	-20	-52.1	3	3	25.9						
	Submersible pumps[2]	2	85	88	160	-20	-52.1	3	3	21.9						
	Exhaust fan for deodourizer[2] - Northwest facing	1	73	73	160	0	-52.1	3	3	26.9						
	Exhaust fan for ventilation[2] - Northeast facing	1	73	73	160	-10	-52.1	3	3	16.9	30	B	50	48	48	Y

Notes:

[1] Reference was made to the approved Project Profile for the Proposed Control of Water Pollution at Jordan Valley Box Culvert - Sewage Pumping Station (EIAO Register No. DIR-180/2009) for the SWL of mechanical screen.

[2] Reference was made to the approved Project Profile for the Proposed Pik Shui Sun Tsuen Sewage Pumping Station (EIAO Register No. DIR-218/2011) for the SWL of submersible pump, and exhaust fans for deodourizer and ventilation with acoustic louver/silencer. As confirmed by DSD and the Project Engineer, the louvers will be located at the northwest and northeast facades of the pumping station only, ie no louver will be installed at the southwest and southeast facades.

[3] Distance between the nearest louvre of the pumping station and the NSR.

[4] A 20dB(A) reduction due to the enclosed building design; a 10dB(A) reduction due to no direct line of sight from the NSR to the fan.

[5] NSR 1 and 2, and 3 are assigned with Area Sensitivity Rating (ASR) of "B" as they are located between 100m to 250m from a zone designated as "Other Specified Uses (OU) (Industrial Estate)" on the Outline Zoning Plan.

[6] The applicable noise limit refers to the lower noise level among the corresponding (ANL-5) level and the minimum measured background noise level from the 24-hour noise monitoring.

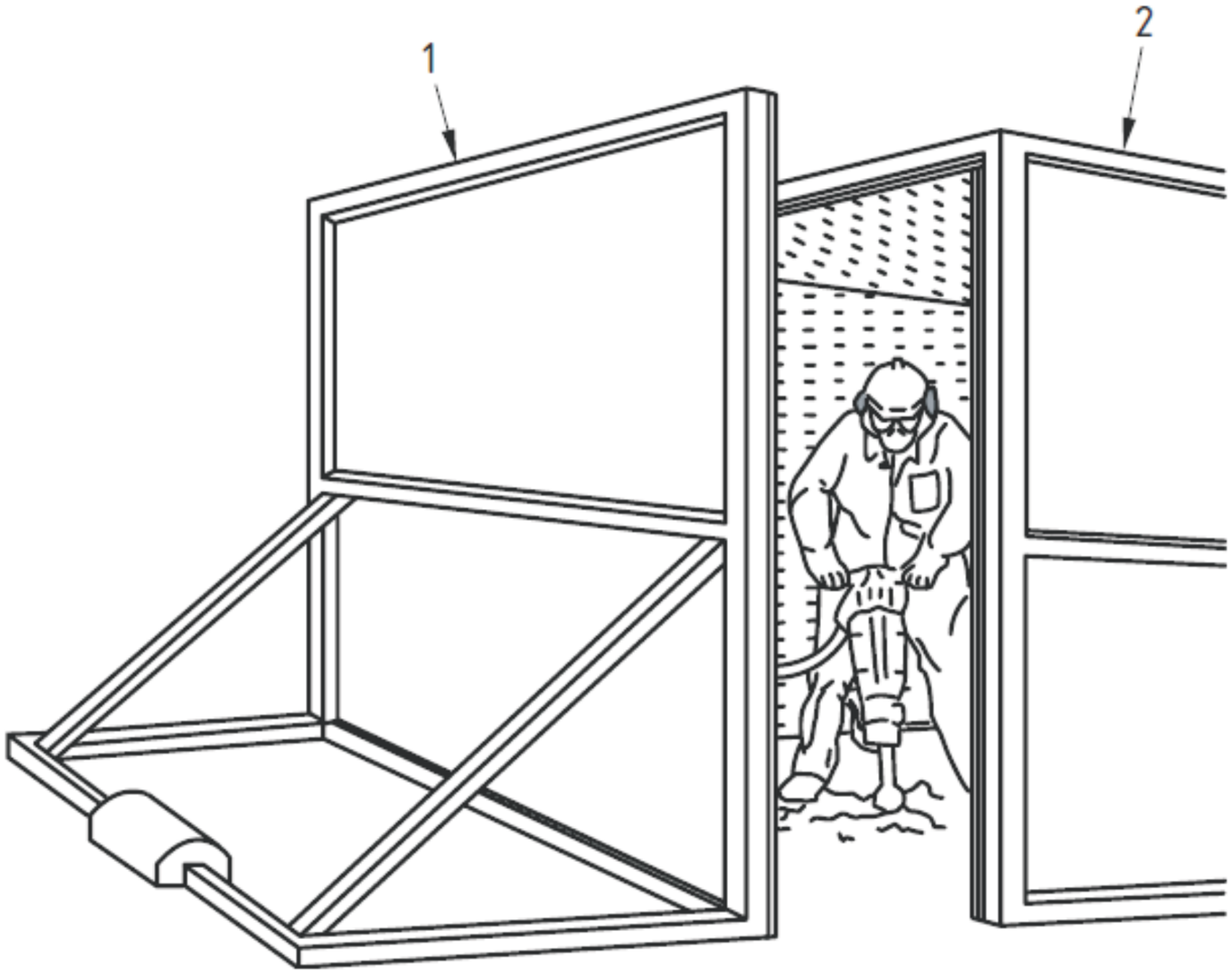

Key

1 Acoustic screen 2 m wide and 2.7 m high

2 Acoustic shed 2 m square and 2.7 m high

Source: BS 5228-1:2009 Code of practice for noise a nd vibration control on construction and open sites – Part 1: Noise

Drainage Services Department 渠務署

BLACK & VEATCH Building a world of difference.

SCHEMATIC CONFIGURATION OF MOVABLE NOISE BARRIER

DRAWING NO.	REVISION
Annex 5C-4	
SCALE: NOT TO SCALE	DATE:
DESIGNED	CHECKED

SECTION VIEW

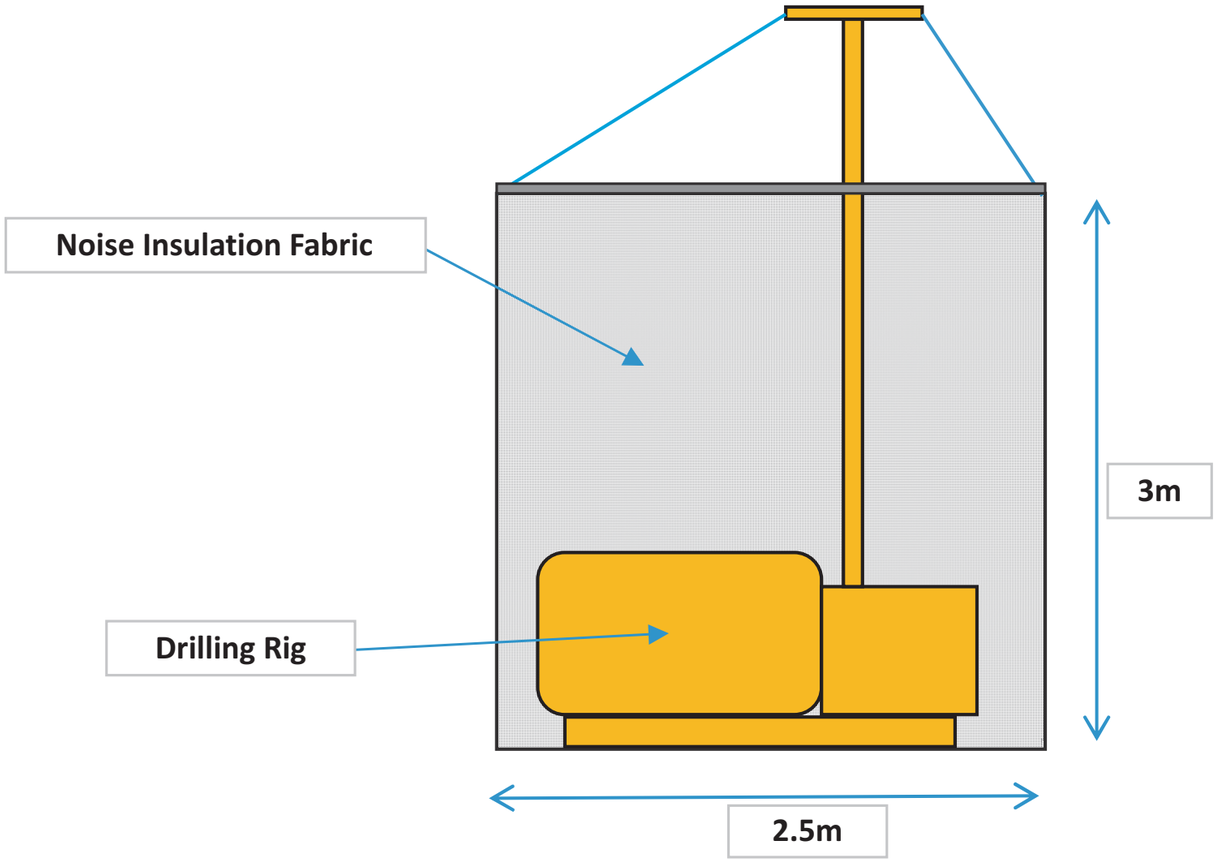

PLAN VIEW

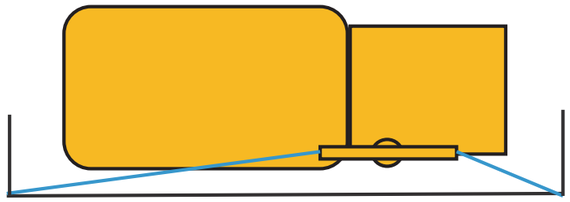

Example photos of noise insulation fabric for drilling rig

Drainage Services Department
渠務署

BLACK & VEATCH
Building a world of difference.

SCHEMATIC CONFIGURATION OF NOISE INSULATION FABRIC FOR DRILLING RIG

DRAWING NO.	REVISION
Annex 5C-5	
SCALE: NOT TO SCALE	DATE:
DESIGNED	CHECKED

© Copyright by Black & Veatch Hong Kong Limited

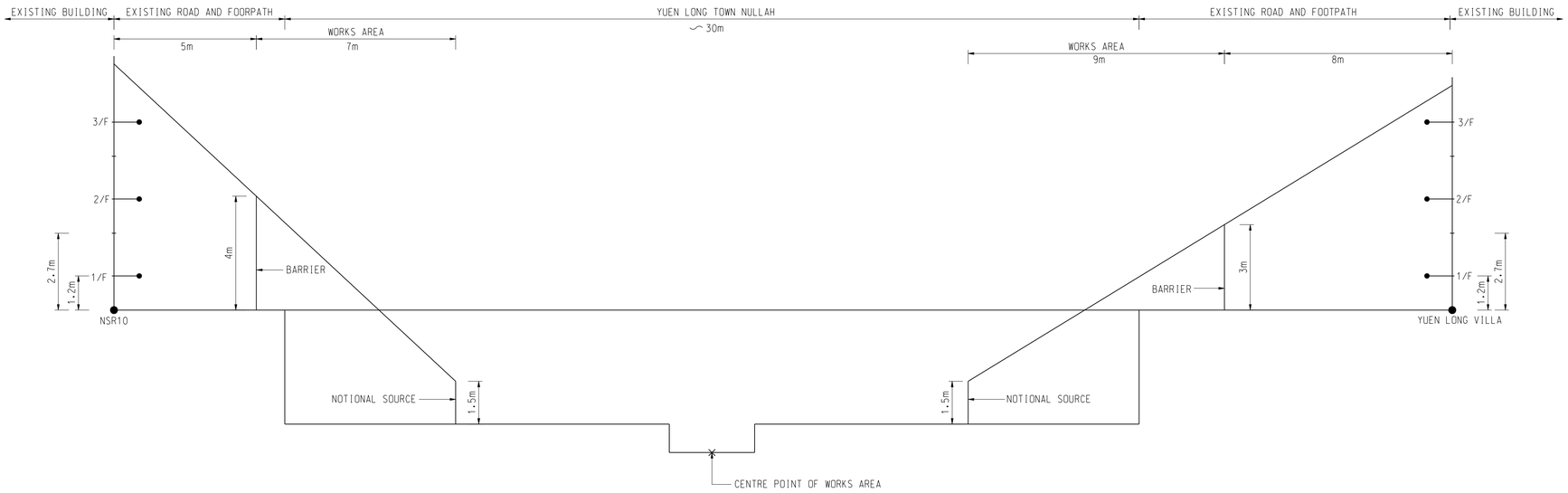

Revision	Date	Description			Initial
A	07/08	REVISE SECTION			RF
	Designed	Checked	Drawn		Checked
Initial	RF	TCL	XP		TCL
Date	JUL2011	JUL2011	JUL2011		JUL2011

Approved

Contract no.

CE 6/2010 (DS)

Contract title

IMPROVEMENT OF
YUEN LONG TOWN NULLAHS
(TOWN CENTRE SECTION)
– INVESTIGATION

Drawing title

TYPICAL SECTION OF
TEMPORARY NOISE BARRIER
(SHEET 1 OF 2)

Drawing no.

ANNEX 5C-6a
(382898/B/NB/00001)

Revision

A

Scale

A1 1 : 100 A3 1 : 200

香港特別行政區政府渠務署
THE GOVERNMENT OF THE
HONG KONG
SPECIAL ADMINISTRATIVE REGION
DRAINAGE SERVICES DEPARTMENT

BLACK & VEATCH HONG KONG LIMITED
博威工程顧問有限公司

Plot Date = 2012-8-15

CAD Filename = Y:\20120815n\382898-B-NB-00001.dgn

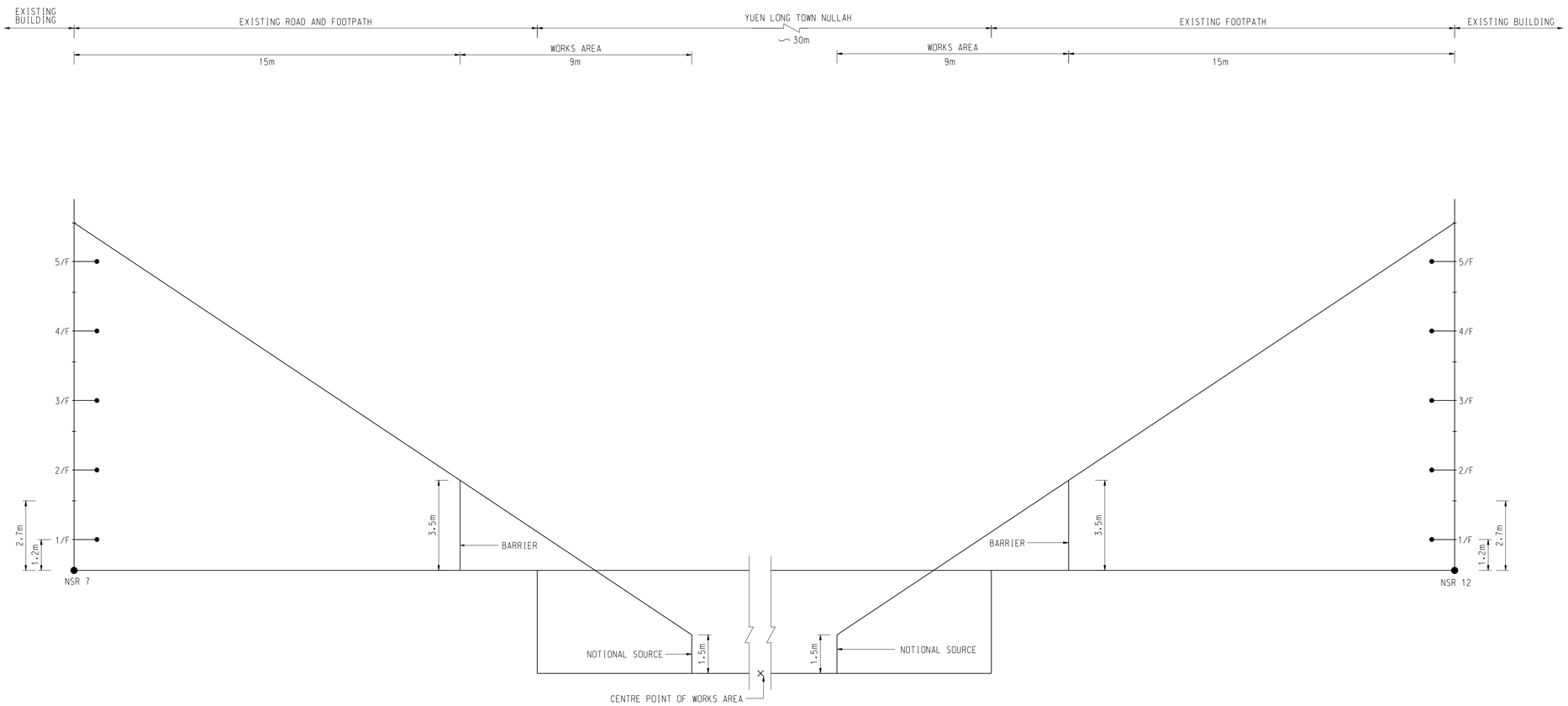

© Copyright by Black & Veatch Hong Kong Limited

Revision	Date	Description		Initial
A	07/08	REVISE SECTION		RF
	Designed	Checked	Drawn	Checked
Initial	RF	TCL	XP	TCL
Date	JUL2011	JUL2011	JUL2011	JUL2011

Approved

Contract no.

CE 6/2010 (DS)

Contract title

IMPROVEMENT OF
YUEN LONG TOWN NULLAHS
(TOWN CENTRE SECTION)
– INVESTIGATION

Drawing title

TYPICAL SECTION OF
TEMPORARY NOISE BARRIER
(SHEET 2 OF 2)

Drawing no.

ANNEX 5C-6b
(382898/B/NB/00002)

Revision

A

Scale

A1 1 : 100 A3 1 : 200

香港特別行政區政府渠務署
THE GOVERNMENT OF THE
HONG KONG
SPECIAL ADMINISTRATIVE REGION
DRAINAGE SERVICES DEPARTMENT

BLACK & VEATCH HONG KONG LIMITED
博威工程顧問有限公司

Plot Date = 2012-8-16

CAD Filename = Y:\20120815n\382898-B-NB-00002.dgn

Annex 5C-7: Construction Noise Calculation for Mitigated Scenario

Construction Plant Inventory (Mitigated Scenario)

No.	Activities	Plant	TM Ref. / Other Ref. [1]	No. of PME	On- time %	Type of Noise Control[3]	Noise reduction, dB(A)	Unit SWL, dB(A)	SWL, dB(A)	Total SWL, dB(A)[2]	Group[4]
1	**Construction of DWFI System**	Hand-held percussive breaker	EPD-07425	1	75%	Fixed temp. noise barrier	-5	103	97	**105**	**A 98**
		Generator	EPD-08020	2	100%	Fixed temp. noise barrier	-5	91	89		**A**
		Water pump (electric)	CNP 281	1	100%	Fixed temp. noise barrier	-5	88	83		**A**
		Dump truck , 5.5 tonne < gross vehicle weight ≦ 38 tonne	EPD/PME/38	1	50%	Fixed temp. noise barrier	-5	105	97		**B 97**
		Concrete lorry mixer	CNP 044	1	50%	Fixed temp. noise barrier	-5	109	101		**C 103**
		Excavator, mini-robot mounted	EPD/PME/13	1	100%	Fixed temp. noise barrier	-5	94	89		**C**
		Poker, vibratory, hand-held (electric)	EPD/PME/19	1	100%	Fixed temp. noise barrier	-5	102	97		**C**
		Crane, mobile	EPD-07994	1	50%			101	98		**D 98**
2	**Construction of Rising Main**	Hand-held percussive breaker	EPD-07425	1	75%	Movable noise barrier	-5	103	97	**107**	**A 98**
		Generator	EPD-08020	2	100%			91	94		**A**
		Water pump (electric)	CNP 281	1	100%	Movable noise barrier	-5	88	83		**A**
		Dump truck , 5.5 tonne < gross vehicle weight ≦ 38 tonne	EPD/PME/38	1	50%			105	102		**B 97**
		Concrete lorry mixer	CNP 044	1	50%	Movable noise barrier	-5	109	101		**C 103**
		Excavator, mini-robot mounted	EPD/PME/13	1	100%	Movable noise barrier	-5	94	89		**C**
		Poker, vibratory, hand-held (electric)	EPD/PME/19	1	100%	Movable noise barrier	-5	102	97		**C**
		Crane, mobile	EPD-07994	1	50%			101	98		**D 98**
3	**Construction of DWF Pumping Station**	Hand-held percussive breaker	EPD-07425	1	75%	Movable noise barrier	-5	103	97	**108**	**A 99**
		Generator	EPD-08020	2	100%			91	94		**A**
		Water pump (electric)	CNP 281	1	100%	Movable noise barrier	-5	88	83		**A**
		Dump truck , 5.5 tonne < gross vehicle weight ≦ 38 tonne	EPD/PME/38	1	50%			105	102		**B 102**
		Drill rig, rotary type (diesel)	EPD/PME/12	1	100%	Noise Insulation Fabric	-10	110	100		**C 100**
		Concrete lorry mixer	CNP 044	1	50%	Movable noise barrier	-5	109	101		**D 103**
		Excavator, mini-robot mounted	EPD/PME/13	1	100%	Movable noise barrier	-5	94	89		**D**
		Poker, vibratory, hand-held (electric)	EPD/PME/19	1	100%	Movable noise barrier	-5	102	97		**D**
		Crane, mobile	EPD-07994	1	50%			101	98		**E 98**

Notes:

[1] Reference: Sound power levels of other commonly used PME (http://www.epd.gov.hk/epd/sites/default/files/epd/english/application_for_licences/guidance/files/OtherSWLe.pdf)

[2] The figures are rounded-up to a whole number.

[3] Movable noise barrier -5dB(A); Noise Insulation Fabric -10dB(A)

[4] Only one group from Group A to Group D will be operated at any one time.

Summary of Predicted Noise Levels from Construction (Mitigated)

NSR	Description	EIAO-TM Noise Criteria, dB(A)	Predicted Construction Noise Level, db(A)																																																								Max. Predicted CNL, db(A)
			2021							2022												2023												2024												2025												2026			
			6	7	8	9	10	11	12	1	2	3	4	5	6	7	8	9	10	11	12	1	2	3	4	5	6	7	8	9	10	11	12	1	2	3	4	5	6	7	8	9	10	11	12	1	2	3	4	5	6	7	8	9	10	11	12	1	2	3	
NSR01	Tung Tau Wai San Tsuen	75	63	63	63	63	63	57	57	57	57	57	63	63	63	63	63	63	63	55	55	55	55	55	63	63	63	63	0	0	0	39	39	39	39	39	0	0	0	0	0	0	0	37	37	37	37	37	0	0	0	0	0	0	0	38	38	38	38	38	63
NSR02	Shan Pui Chung Hau Tsuen	75	67	67	67	67	67	60	60	60	60	60	67	67	67	67	67	67	67	59	59	59	59	59	67	67	67	67	0	0	0	40	40	40	40	40	0	0	0	0	0	0	0	37	37	37	37	37	0	0	0	0	0	0	0	38	38	38	38	38	67
NSR03	Twin Regency	75	74	74	74	74	74	72	72	72	72	72	74	74	74	74	74	74	74	72	72	72	72	72	74	74	74	74	0	0	0	41	41	41	41	41	0	0	0	0	0	0	0	38	38	38	38	38	0	0	0	0	0	0	0	39	39	39	39	39	74
NSR04	Yuk Yat Garden	75	53	53	53	53	53	57	57	57	57	57	53	53	53	53	53	53	53	60	60	60	60	60	53	53	53	53	0	0	0	44	44	44	44	44	0	0	0	0	0	0	0	39	39	39	39	39	0	0	0	0	0	0	0	41	41	41	41	41	60
NSR05	Wang Fu Court	75	55	55	55	55	55	60	60	60	60	60	55	55	55	55	55	55	55	60	60	60	60	60	55	55	55	55	0	0	0	44	44	44	44	44	0	0	0	0	0	0	0	40	40	40	40	40	0	0	0	0	0	0	0	42	42	42	42	42	60
NSR06	Yeung Uk San Tsuen	75	49	49	49	49	49	51	51	51	51	51	49	49	49	49	49	49	49	60	60	60	60	60	49	49	49	49	0	0	0	46	46	46	46	46	0	0	0	0	0	0	0	41	41	41	41	41	0	0	0	0	0	0	0	43	43	43	43	43	60
NSR07	Yuen Long Long Ping Estate Wai Chow School	70/65	47	47	47	47	47	49	49	49	49	49	47	47	47	47	47	47	47	57	57	57	57	57	47	47	47	47	0	0	0	49	49	49	49	49	0	0	0	0	0	0	0	42	42	42	42	42	0	0	0	0	0	0	0	45	45	45	45	45	57
NSR08	The Spectra	75	46	46	46	46	46	49	49	49	49	49	46	46	46	46	46	46	46	61	61	61	61	61	46	46	46	46	0	0	0	53	53	53	53	53	0	0	0	0	0	0	0	44	44	44	44	44	0	0	0	0	0	0	0	47	47	47	47	47	61
NSR09	Tai Kiu Tsuen	75	44	44	44	44	44	47	47	47	47	47	44	44	44	44	44	44	44	51	51	51	51	51	44	44	44	44	0	0	0	71	71	71	71	71	0	0	0	0	0	0	0	47	47	47	47	47	0	0	0	0	0	0	0	53	53	53	53	53	71
NSR10	Fuk Yip Building	75	42	42	42	42	42	48	48	48	48	48	42	42	42	42	42	42	42	48	48	48	48	48	42	42	42	42	0	0	0	59	59	59	59	59	0	0	0	0	0	0	0	52	52	52	52	52	0	0	0	0	0	0	0	73	73	73	73	73	73
NSR11	Yuen Fat House	75	42	42	42	42	42	49	49	49	49	49	42	42	42	42	42	42	42	47	47	47	47	47	42	42	42	42	0	0	0	53	53	53	53	53	0	0	0	0	0	0	0	58	58	58	58	58	0	0	0	0	0	0	0	74	74	74	74	74	74
NSR12	Healey Building	75	41	41	41	41	41	50	50	50	50	50	41	41	41	41	41	41	41	47	47	47	47	47	41	41	41	41	0	0	0	52	52	52	52	52	0	0	0	0	0	0	0	60	60	60	60	60	0	0	0	0	0	0	0	68	68	68	68	68	68
NSR13	Wah Shing Mansion	75	41	41	41	41	41	52	52	52	52	52	41	41	41	41	41	41	41	47	47	47	47	47	41	41	41	41	0	0	0	49	49	49	49	49	0	0	0	0	0	0	0	70	70	70	70	70	0	0	0	0	0	0	0	58	58	58	58	58	70
NSR14	CCC Chun Kwong Primary School	70 (normal school days)	41	41	41	41	41	54	54	54	54	54	41	41	41	41	41	41	41	47	47	47	47	47	41	41	41	41	0	0	0	46	46	46	46	46	0	0	0	0	0	0	0	70	70	70	70	70	0	0	0	0	0	0	0	55	55	55	55	55	70
		65 (examination period)	41	41	41	41	41	54	54	54	54	54	41	41	41	41	41	41	41	47	47	47	47	47	41	41	41	41	0	0	0	46	46	46	46	46	0	0	0	0	0	0	0	0	0	0	0	0	0	0	0	0	0	0	0	55	55	55	55	55	55
NSR15	Tse King House	75	39	39	39	39	39	65	65	65	65	65	39	39	39	39	39	39	39	49	49	49	49	49	39	39	39	39	0	0	0	45	45	45	45	45	0	0	0	0	0	0	0	59	59	59	59	59	0	0	0	0	0	0	0	50	50	50	50	50	65
NSR16	On Ning Building	75	39	39	39	39	39	67	67	67	67	67	39	39	39	39	39	39	39	50	50	50	50	50	39	39	39	39	0	0	0	44	44	44	44	44	0	0	0	0	0	0	0	54	54	54	54	54	0	0	0	0	0	0	0	48	48	48	48	48	67
NSR17	Ho Wang Building	75	39	39	39	39	39	74	74	74	74	74	39	39	39	39	39	39	39	51	51	51	51	51	39	39	39	39	0	0	0	44	44	44	44	44	0	0	0	0	0	0	0	54	54	54	54	54	0	0	0	0	0	0	0	47	47	47	47	47	74
NSR18	Caritas Yuen Long Chan Chun Ha Secondary School	70 (normal school days)	39	39	39	39	39	65	65	65	65	65	39	39	39	39	39	39	39	55	55	55	55	55	39	39	39	39	0	0	0	42	42	42	42	42	0	0	0	0	0	0	0	50	50	50	50	50	0	0	0	0	0	0	0	45	45	45	45	45	65
		65 (examination period)	39	39	39	39	39	0	0	0	0	0	39	39	39	39	39	39	39	55	55	55	55	55	39	39	39	39	0	0	0	42	42	42	42	42	0	0	0	0	0	0	0	50	50	50	50	50	0	0	0	0	0	0	0	45	45	45	45	45	55
NSR19	Sun Fai Court	75	37	37	37	37	37	55	55	55	55	55	37	37	37	37	37	37	37	74	74	74	74	74	37	37	37	37	0	0	0	40	40	40	40	40	0	0	0	0	0	0	0	46	46	46	46	46	0	0	0	0	0	0	0	43	43	43	43	43	74
NSR20	Ma Tin Tsuen - Kung Um Road	75	37	37	37	37	37	50	50	50	50	50	37	37	37	37	37	37	37	72	72	72	72	72	37	37	37	37	0	0	0	39	39	39	39	39	0	0	0	0	0	0	0	44	44	44	44	44	0	0	0	0	0	0	0	41	41	41	41	41	72
NSR21	Yuen Long Villa	75	37	37	37	37	37	51	51	51	51	51	37	37	37	37	37	37	37	73	73	73	73	73	37	37	37	37	0	0	0	40	40	40	40	40	0	0	0	0	0	0	0	44	44	44	44	44	0	0	0	0	0	0	0	42	42	42	42	42	73
NSR22	Lung Tin Tsuen	75	36	36	36	36	36	47	47	47	47	47	36	36	36	36	36	36	36	58	58	58	58	58	36	36	36	36	0	0	0	38	38	38	38	38	0	0	0	0	0	0	0	42	42	42	42	42	0	0	0	0	0	0	0	40	40	40	40	40	58
NSR23	Wang Chau Lam Uk Tsuen	75	59	59	59	59	59	60	60	60	60	60	59	59	59	59	59	59	59	56	56	56	56	56	59	59	59	59	0	0	0	41	41	41	41	41	0	0	0	0	0	0	0	38	38	38	38	38	0	0	0	0	0	0	0	39	39	39	39	39	60
NSR24	Wang Chau Tung Tau Wai	75	59	59	59	59	59	58	58	58	58	58	59	59	59	59	59	59	59	55	55	55	55	55	59	59	59	59	0	0	0	40	40	40	40	40	0	0	0	0	0	0	0	37	37	37	37	37	0	0	0	0	0	0	0	39	39	39	39	39	59
NSR25	Hong Kong School of Motoring - Yuen Long Road Safety Centre	70/65	51	51	51	51	51	48	48	48	48	48	51	51	51	51	51	51	51	47	47	47	47	47	51	51	51	51	0	0	0	37	37	37	37	37	0	0	0	0	0	0	0	35	35	35	35	35	0	0	0	0	0	0	0	36	36	36	36	36	51
R1	Sol City (Planned)	75	43	43	43	43	43	47	47	47	47	47	43	43	43	43	43	43	43	49	49	49	49	49	43	43	43	43	0	0	0	70	70	70	70	70	0	0	0	0	0	0	0	49	49	49	49	49	0	0	0	0	0	0	0	57	57	57	57	57	70

Predicted Noise Level exceeded the corresponding EIAO-TM noise criteria

Construction Noise Assessment (Mitigated)

NSR01 Tung Tau Wai San Tsuen

Activity	SWL dB(A)	Distance m	Corr. for Distance dB(A) [1][2]	Corr. for Topo	Corr. for façade dB(A)	2021							2022												2023												2024												2025												2026		
						6	7	8	9	10	11	12	1	2	3	4	5	6	7	8	9	10	11	12	1	2	3	4	5	6	7	8	9	10	11	12	1	2	3	4	5	6	7	8	9	10	11	12	1	2	3	4	5	6	7	8	9	10	11	12	1	2	3
Construction of DWFI System																																																															
Section A – A1	103	184	-53	0	3						52	52	52	52	52																																																	
Section A – A2	103	387	-60	0	3																		46	46	46	46	46																																						
Section A – A3	103	1318	-70	0	3						35	35	35	35	35																																																	
Section A – A4	103	1580	-72	0	3																		34	34	34	34	34																																					
Section B – B1	103	1137	-69	0	3																																										37	37	37	37	37											
Section B – B2	103	965	-68	0	3																																																						38	38	38	38	38
Section B – B3	103	815	-66	0	3																														39	39	39	39	39																								
Construction of Rising Mains																																																															
Rising Mains	103	56	-43	0	3	63	63	63	63	63						63	63	63	63	63	63	63						63	63	63	63																																	
Construction of Pumping Station																																																															
DWF Pumping Station	103	141	-51	0	3	55	55	55	55	55	55	55	55	55	55	55	55	55	55	55	55	55	55	55	55	55	55	55	55	55	55																																	
Predicted Noise Level during Daytime Period, dB(A)						63	63	63	63	63	57	57	57	57	57	63	63	63	63	63	63	63	55	55	55	55	55	63	63	63	63	0	0	0	39	39	39	39	39	0	0	0	0	0	0	0	37	37	37	37	37	0	0	0	0	0	0	0	38	38	38	38	38

Note:

[1] Distance Correction for PMEs = $10*\log(2*PI*r^2)$

[2] The figures are rounded-up to a whole number.

Construction Noise Assessment (Mitigated)

NSR02 Shan Pui Chung Hau Tsuen

Activity	SWL dB(A)	Distance m	Corr. for Distance dB(A) [1][2]	Corr. for Topo	Corr. for façade dB(A)	2021							2022												2023												2024												2025												2026		
						6	7	8	9	10	11	12	1	2	3	4	5	6	7	8	9	10	11	12	1	2	3	4	5	6	7	8	9	10	11	12	1	2	3	4	5	6	7	8	9	10	11	12	1	2	3	4	5	6	7	8	9	10	11	12	1	2	3
Construction of DWFI System																																																															
Section A – A1	103	167	-52	0	3						53	53	53	53	53																																																	
Section A – A2	103	368	-59	0	3																		46	46	46	46	46																																						
Section A – A3	103	1255	-70	0	3						36	36	36	36	36																																																	
Section A – A4	103	1510	-72	0	3																		34	34	34	34	34																																					
Section B – B1	103	1081	-69	0	3																																										37	37	37	37	37											
Section B – B2	103	916	-67	0	3																																																						38	38	38	38	38
Section B – B3	103	775	-66	0	3																													40	40	40	40	40																									
Construction of Rising Mains																																																															
Rising Mains	103	37	-39	0	3	66	66	66	66	66						66	66	66	66	66	66	66						66	66	66	66																																	
Construction of Pumping Station																																																															
DWF Pumping Station	103	85	-47	0	3	59	59	59	59	59	59	59	59	59	59	59	59	59	59	59	59	59	59	59	59	59	59	59	59	59	59																																	
Predicted Noise Level during Daytime Period, dB(A)						67	67	67	67	67	60	60	60	60	60	67	67	67	67	67	67	67	59	59	59	59	59	67	67	67	67	0	0	0	40	40	40	40	40	0	0	0	0	0	0	0	37	37	37	37	37	0	0	0	0	0	0	0	38	38	38	38	38

Note:

[1] Distance Correction for PMEs = $10*\log(2*PI*r^2)$

[2] The figures are rounded-up to a whole number.

Construction Noise Assessment (Mitigated)

NSR03 Twin Regency

Activity	SWL dB(A)	Distance m	Corr. for Distance dB(A) [1][2]	Corr. for Topo	Corr. for façade dB(A)	2021							2022												2023												2024												2025												2026		
						6	7	8	9	10	11	12	1	2	3	4	5	6	7	8	9	10	11	12	1	2	3	4	5	6	7	8	9	10	11	12	1	2	3	4	5	6	7	8	9	10	11	12	1	2	3	4	5	6	7	8	9	10	11	12	1	2	3
Construction of DWFI System																																																															
Section A – A1	103	83	-46	0	3						59	59	59	59	59																																																	
Section A – A2	103	278	-57	0	3																		49	49	49	49	49																																					
Section A – A3	103	1172	-69	0	3						36	36	36	36	36																																																	
Section A – A4	103	1429	-71	0	3																		35	35	35	35	35																																					
Section B – B1	103	995	-68	0	3																																										38	38	38	38	38											
Section B – B2	103	829	-66	0	3																																																						39	39	39	39	39
Section B – B3	103	687	-65	0	3																														41	41	41	41	41																								
Construction of Rising Mains																																																															
Rising Mains	103	27	-36	0	3	69	69	69	69	69						69	69	69	69	69	69	69						69	69	69	69																																	
Construction of Pumping Station																																																															
DWF Pumping Station	103	19	-34	0	3	72	72	72	72	72	72	72	72	72	72	72	72	72	72	72	72	72	72	72	72	72	72	72	72	72	72																																	
Predicted Noise Level during Daytime Period, dB(A)						74	74	74	74	74	72	72	72	72	72	74	74	74	74	74	74	74	72	72	72	72	72	74	74	74	74	0	0	0	41	41	41	41	41	0	0	0	0	0	0	0	38	38	38	38	38	0	0	0	0	0	0	0	39	39	39	39	39

Note:

[1] Distance Correction for PMEs = $10*\log(2*PI*r^2)$

[2] The figures are rounded-up to a whole number.

Construction Noise Assessment (Mitigated)

NSR04 Yuk Yat Garden

Activity	SWL dB(A)	Distance m	Corr. for Distance dB(A) [1][2]	Corr. for Topo	Corr. for façade dB(A)	2021							2022												2023												2024												2025												2026		
						6	7	8	9	10	11	12	1	2	3	4	5	6	7	8	9	10	11	12	1	2	3	4	5	6	7	8	9	10	11	12	1	2	3	4	5	6	7	8	9	10	11	12	1	2	3	4	5	6	7	8	9	10	11	12	1	2	3
Construction of DWFI System																																																															
Section A – A1	103	121	-50	0	3						56	56	56	56	56																																																	
Section A – A2	103	83	-46	0	3																		59	59	59	59	59																																					
Section A – A3	103	1022	-68	0	3						37	37	37	37	37																																																	
Section A – A4	103	1291	-70	0	3																		35	35	35	35	35																																					
Section B – B1	103	837	-66	0	3																																											39	39	39	39	39											
Section B – B2	103	658	-64	0	3																																																							41	41	41	41	41
Section B – B3	103	501	-62	0	3																														44	44	44	44	44																									
Construction of Rising Mains																																																															
Rising Mains	103	242	-56	0	3	50	50	50	50	50						50	50	50	50	50	50	50						50	50	50	50																																	
Construction of Pumping Station																																																															
DWF Pumping Station	103	250	-56	0	3	50	50	50	50	50	50	50	50	50	50	50	50	50	50	50	50	50	50	50	50	50	50	50	50	50	50																																	
Predicted Noise Level during Daytime Period, dB(A)						53	53	53	53	53	57	57	57	57	57	53	53	53	53	53	53	53	60	60	60	60	60	53	53	53	53	0	0	0	44	44	44	44	44	0	0	0	0	0	0	0	39	39	39	39	39	0	0	0	0	0	0	0	41	41	41	41	41

Note:

[1] Distance Correction for PMEs = $10*\log(2*PI*r^2)$

[2] The figures are rounded-up to a whole number.

Construction Noise Assessment (Mitigated)

NSR05 Wang Fu Court

Activity	SWL dB(A)	Distance m	Corr. for Distance dB(A) [1][2]	Corr. for Topo	Corr. for façade dB(A)	2021							2022												2023												2024												2025												2026		
						6	7	8	9	10	11	12	1	2	3	4	5	6	7	8	9	10	11	12	1	2	3	4	5	6	7	8	9	10	11	12	1	2	3	4	5	6	7	8	9	10	11	12	1	2	3	4	5	6	7	8	9	10	11	12	1	2	3
Construction of DWFI System																																																															
Section A – A1	103	83	-46	0	3						59	59	59	59	59																																																	
Section A – A2	103	81	-46	0	3																		59	59	59	59	59																																					
Section A – A3	103	986	-68	0	3						38	38	38	38	38																																																	
Section A – A4	103	1249	-70	0	3																		36	36	36	36	36																																					
Section B – B1	103	805	-66	0	3																																										40	40	40	40	40											
Section B – B2	103	634	-64	0	3																																																						42	42	42	42	42
Section B – B3	103	487	-62	0	3																													44	44	44	44	44																									
Construction of Rising Mains																																																															
Rising Mains	103	208	-54	0	3	51	51	51	51	51						51	51	51	51	51	51	51						51	51	51	51																																	
Construction of Pumping Station																																																															
DWF Pumping Station	103	193	-54	0	3	52	52	52	52	52	52	52	52	52	52	52	52	52	52	52	52	52	52	52	52	52	52	52	52	52	52																																	
Predicted Noise Level during Daytime Period, dB(A)						55	55	55	55	55	60	60	60	60	60	55	55	55	55	55	55	55	60	60	60	60	60	55	55	55	55	0	0	0	44	44	44	44	44	0	0	0	0	0	0	0	40	40	40	40	40	0	0	0	0	0	0	0	42	42	42	42	42

Note:

[1] Distance Correction for PMEs = $10*\log(2*PI*r^2)$

[2] The figures are rounded-up to a whole number.

Construction Noise Assessment (Mitigated)

NSR06 Yeung Uk San Tsuen

Activity	SWL dB(A)	Distance m	Corr. for Distance dB(A) [1][2]	Corr. for Topo	Corr. for façade dB(A)	2021							2022												2023												2024												2025												2026		
						6	7	8	9	10	11	12	1	2	3	4	5	6	7	8	9	10	11	12	1	2	3	4	5	6	7	8	9	10	11	12	1	2	3	4	5	6	7	8	9	10	11	12	1	2	3	4	5	6	7	8	9	10	11	12	1	2	3
Construction of DWFI System																																																																
Section A – A1	103	264	-56	0	3						49	49	49	49	49																																																		
Section A – A2	103	75	-45	0	3																		60	60	60	60	60																																						
Section A – A3	103	894	-67	0	3						39	39	39	39	39																																																	
Section A – A4	103	1165	-69	0	3																		36	36	36	36	36																																					
Section B – B1	103	708	-65	0	3																																											41	41	41	41	41										
Section B – B2	103	528	-62	0	3																																																						43	43	43	43	43
Section B – B3	103	369	-59	0	3																														46	46	46	46	46																									
Construction of Rising Mains																																																																
Rising Mains	103	393	-60	0	3	46	46	46	46	46						46	46	46	46	46	46	46						46	46	46	46																																	
Construction of Pumping Station																																																																
DWF Pumping Station	103	393	-60	0	3	46	46	46	46	46	46	46	46	46	46	46	46	46	46	46	46	46	46	46	46	46	46	46	46	46	46																																	
Predicted Noise Level during Daytime Period, dB(A)						49	49	49	49	49	51	51	51	51	51	49	49	49	49	49	49	49	60	60	60	60	60	49	49	49	49	0	0	0	46	46	46	46	46	0	0	0	0	0	0	0	41	41	41	41	41	0	0	0	0	0	0	0	43	43	43	43	43

Note:

[1] Distance Correction for PMEs = $10*\log(2*PI*r^2)$

[2] The figures are rounded-up to a whole number.

Construction Noise Assessment (Mitigated)

NSR07 Yuen Long Long Ping Estate Wai Chow School

Activity	SWL dB(A)	Distance m	Corr. for Distance dB(A) [1][2]	Corr. for Topo	Corr. for façade dB(A)	2021							2022												2023												2024												2025												2026		
						6	7	8	9	10	11	12	1	2	3	4	5	6	7	8	9	10	11	12	1	2	3	4	5	6	7	8	9	10	11	12	1	2	3	4	5	6	7	8	9	10	11	12	1	2	3	4	5	6	7	8	9	10	11	12	1	2	3
Construction of DWFI System																																																																
Section A – A1	103	380	-60	0	3						46	46	46	46	46																																																		
Section A – A2	103	114	-49	0	3																		57	57	57	57	57																																						
Section A – A3	103	806	-66	0	3						40	40	40	40	40																																																	
Section A – A4	103	1078	-69	0	3																		37	37	37	37	37																																					
Section B – B1	103	620	-64	0	3																																											42	42	42	42	42											
Section B – B2	103	441	-61	0	3																																																							45	45	45	45	45
Section B – B3	103	284	-57	0	3																													49	49	49	49	49																										
Construction of Rising Mains																																																																
Rising Mains	103	511	-62	0	3	43	43	43	43	43						43	43	43	43	43	43	43						43	43	43	43																																		
Construction of Pumping Station																																																																
DWF Pumping Station	103	509	-62	0	3	44	44	44	44	44	44	44	44	44	44	44	44	44	44	44	44	44	44	44	44	44	44	44	44	44	44																																		
Predicted Noise Level during Daytime Period, dB(A)						47	47	47	47	47	49	49	49	49	49	47	47	47	47	47	47	47	57	57	57	57	57	47	47	47	47	0	0	0	49	49	49	49	49	0	0	0	0	0	0	0	42	42	42	42	42	0	0	0	0	0	0	0	45	45	45	45	45

Note:

[1] Distance Correction for PMEs = $10*\log(2*PI*r^2)$

[2] The figures are rounded-up to a whole number.

Construction Noise Assessment (Mitigated)

NSR08 The Spectra

Activity	SWL dB(A)	Distance m	Corr. for Distance dB(A) [1][2]	Corr. for Topo	Corr. for façade dB(A)	2021							2022												2023												2024												2025												2026		
						6	7	8	9	10	11	12	1	2	3	4	5	6	7	8	9	10	11	12	1	2	3	4	5	6	7	8	9	10	11	12	1	2	3	4	5	6	7	8	9	10	11	12	1	2	3	4	5	6	7	8	9	10	11	12	1	2	3
Construction of DWFI System																																																																		
Section A – A1	103	399	-60	0	3						46	46	46	46	46																																																			
Section A – A2	103	66	-44	0	3																		61	61	61	61	61																																							
Section A – A3	103	686	-65	0	3						41	41	41	41	41																																																			
Section A – A4	103	956	-68	0	3																		38	38	38	38	38																																							
Section B – B1	103	501	-62	0	3																																										44	44	44	44	44														
Section B – B2	103	323	-58	0	3																																																								47	47	47	47	47
Section B – B3	103	168	-52	0	3																													53	53	53	53	53																											
Construction of Rising Mains																																																																		
Rising Mains	103	529	-62	0	3	43	43	43	43	43						43	43	43	43	43	43	43						43	43	43	43																																			
Construction of Pumping Station																																																																		
DWF Pumping Station	103	515	-62	0	3	43	43	43	43	43	43	43	43	43	43	43	43	43	43	43	43	43	43	43	43	43	43	43	43	43	43																																			
Predicted Noise Level during Daytime Period, dB(A)						46	46	46	46	46	49	49	49	49	49	46	46	46	46	46	46	46	61	61	61	61	61	46	46	46	46	0	0	0	53	53	53	53	53	0	0	0	0	0	0	0	44	44	44	44	44	0	0	0	0	0	0	0	47	47	47	47	47

Note:

[1] Distance Correction for PMEs = $10*\log(2*PI*r^2)$

[2] The figures are rounded-up to a whole number.

Construction Noise Assessment (Mitigated)

NSR09 Tai Kiu Tsuen

Activity	SWL dB(A)	Distance m	Corr. for Distance dB(A) [1][2]	Corr. for Topo	Corr. for façade dB(A)	2021							2022												2023												2024												2025												2026		
						6	7	8	9	10	11	12	1	2	3	4	5	6	7	8	9	10	11	12	1	2	3	4	5	6	7	8	9	10	11	12	1	2	3	4	5	6	7	8	9	10	11	12	1	2	3	4	5	6	7	8	9	10	11	12	1	2	3
Construction of DWFI System																																																																
Section A – A1	103	556	-63	0	3						43	43	43	43	43																																																		
Section A – A2	103	224	-55	0	3																		51	51	51	51	51																																						
Section A – A3	103	529	-62	0	3						43	43	43	43	43																																																	
Section A – A4	103	799	-66	0	3																		40	40	40	40	40																																						
Section B – B1	103	342	-59	0	3																																										47	47	47	47	47											
Section B – B2	103	163	-52	0	3																																																							53	53	53	53	53
Section B – B3	103	21	-34	0	3																													71	71	71	71	71																										
Construction of Rising Mains																																																																
Rising Mains	103	683	-65	0	3	41	41	41	41	41						41	41	41	41	41	41	41						41	41	41	41																																		
Construction of Pumping Station																																																																
DWF Pumping Station	103	668	-64	0	3	41	41	41	41	41	41	41	41	41	41	41	41	41	41	41	41	41	41	41	41	41	41	41	41	41	41																																	
Predicted Noise Level during Daytime Period, dB(A)						44	44	44	44	44	47	47	47	47	47	44	44	44	44	44	44	44	51	51	51	51	51	44	44	44	44	0	0	0	71	71	71	71	71	0	0	0	0	0	0	0	47	47	47	47	47	0	0	0	0	0	0	0	53	53	53	53	53

Note:

[1] Distance Correction for PMEs = $10*\log(2*PI*r^2)$

[2] The figures are rounded-up to a whole number.

Construction Noise Assessment (Mitigated)

NSR10 Fuk Yip Building

Activity	SWL dB(A)	Distance m	Corr. for Distance dB(A) [1][2]	Corr. for Topo	Corr. for façade dB(A)	2021							2022												2023												2024												2025												2026		
						6	7	8	9	10	11	12	1	2	3	4	5	6	7	8	9	10	11	12	1	2	3	4	5	6	7	8	9	10	11	12	1	2	3	4	5	6	7	8	9	10	11	12	1	2	3	4	5	6	7	8	9	10	11	12	1	2	3
Construction of DWFI System																																																															
Section A – A1	103	719	-65	0	3						41	41	41	41	41																																																	
Section A – A2	103	386	-60	0	3																		46	46	46	46	46																																					
Section A – A3	103	373	-59	0	3						46	46	46	46	46																																																	
Section A – A4	103	645	-64	0	3																		41	41	41	41	41																																					
Section B – B1	103	187	-53	0	3																																										52	52	52	52	52											
Section B – B2	103	16	-32	0	3																																																						73	73	73	73	73
Section B – B3	103	83	-46	0	3																													59	59	59	59	59																									
Construction of Rising Mains																																																															
Rising Mains	103	845	-67	0	3	39	39	39	39	39						39	39	39	39	39	39	39						39	39	39	39																																	
Construction of Pumping Station																																																															
DWF Pumping Station	103	830	-66	0	3	39	39	39	39	39	39	39	39	39	39	39	39	39	39	39	39	39	39	39	39	39	39	39	39	39	39																																	
Predicted Noise Level during Daytime Period, dB(A)						42	42	42	42	42	48	48	48	48	48	42	42	42	42	42	42	42	48	48	48	48	48	42	42	42	42	0	0	0	59	59	59	59	59	0	0	0	0	0	0	0	52	52	52	52	52	0	0	0	0	0	0	0	73	73	73	73	73

Note:

[1] Distance Correction for PMEs = $10*\log(2*PI*r^2)$

[2] The figures are rounded-up to a whole number.

Construction Noise Assessment (Mitigated)

NSR11 Yuen Fat House

Activity	SWL dB(A)	Distance m	Corr. for Distance dB(A) [1][2]	Corr. for Topo	Corr. for façade dB(A)	2021							2022												2023												2024												2025												2026		
						6	7	8	9	10	11	12	1	2	3	4	5	6	7	8	9	10	11	12	1	2	3	4	5	6	7	8	9	10	11	12	1	2	3	4	5	6	7	8	9	10	11	12	1	2	3	4	5	6	7	8	9	10	11	12	1	2	3
Construction of DWFI System																																																															
Section A – A1	103	790	-66	0	3						40	40	40	40	40																																																	
Section A – A2	103	468	-61	0	3																		44	44	44	44	44																																					
Section A – A3	103	284	-57	0	3						49	49	49	49	49																																																
Section A – A4	103	554	-63	0	3																		43	43	43	43	43																																					
Section B – B1	103	98	-48	0	3																																										58	58	58	58	58											
Section B – B2	103	15	-32	0	3																																																						74	74	74	74	74
Section B – B3	103	172	-53	0	3																													53	53	53	53	53																									
Construction of Rising Mains																																																															
Rising Mains	103	911	-67	0	3	38	38	38	38	38						38	38	38	38	38	38	38						38	38	38	38																																	
Construction of Pumping Station																																																															
DWF Pumping Station	103	895	-67	0	3	39	39	39	39	39	39	39	39	39	39	39	39	39	39	39	39	39	39	39	39	39	39	39	39	39	39																																	
Predicted Noise Level during Daytime Period, dB(A)						42	42	42	42	42	49	49	49	49	49	42	42	42	42	42	42	42	47	47	47	47	47	42	42	42	42	0	0	0	53	53	53	53	53	0	0	0	0	0	0	0	58	58	58	58	58	0	0	0	0	0	0	0	74	74	74	74	74

Note:

[1] Distance Correction for PMEs = $10*\log(2*PI*r^2)$

[2] The figures are rounded-up to a whole number.

Construction Noise Assessment (Mitigated)

NSR12 Healey Building

Activity	SWL dB(A)	Distance m	Corr. for Distance dB(A) [1][2]	Corr. for Topo	Corr. for façade dB(A)	2021							2022												2023												2024												2025												2026		
						6	7	8	9	10	11	12	1	2	3	4	5	6	7	8	9	10	11	12	1	2	3	4	5	6	7	8	9	10	11	12	1	2	3	4	5	6	7	8	9	10	11	12	1	2	3	4	5	6	7	8	9	10	11	12	1	2	3
Construction of DWFI System																																																															
Section A – A1	103	822	-66	0	3						39	39	39	39	39																																																	
Section A – A2	103	494	-62	0	3																		44	44	44	44	44																																						
Section A – A3	103	265	-56	0	3						49	49	49	49	49																																																	
Section A – A4	103	537	-63	0	3																		43	43	43	43	43																																						
Section B – B1	103	79	-46	0	3																																										60	60	60	60	60											
Section B – B2	103	29	-37	0	3																																																						68	68	68	68	68
Section B – B3	103	191	-54	0	3																													52	52	52	52	52																									
Construction of Rising Mains																																																															
Rising Mains	103	946	-67	0	3	38	38	38	38	38						38	38	38	38	38	38	38						38	38	38	38																																	
Construction of Pumping Station																																																															
DWF Pumping Station	103	930	-67	0	3	38	38	38	38	38	38	38	38	38	38	38	38	38	38	38	38	38	38	38	38	38	38	38	38	38	38																																	
Predicted Noise Level during Daytime Period, dB(A)						41	41	41	41	41	50	50	50	50	50	41	41	41	41	41	41	41	47	47	47	47	47	41	41	41	41	0	0	0	52	52	52	52	52	0	0	0	0	0	0	0	60	60	60	60	60	0	0	0	0	0	0	0	68	68	68	68	68

Note:

[1] Distance Correction for PMEs = $10*\log(2*PI*r^2)$

[2] The figures are rounded-up to a whole number.

Construction Noise Assessment (Mitigated)

NSR13 Wah Shing Mansion

Activity	SWL dB(A)	Distance m	Corr. for Distance dB(A) [1][2]	Corr. for Topo	Corr. for façade dB(A)	2021							2022												2023												2024												2025												2026		
						6	7	8	9	10	11	12	1	2	3	4	5	6	7	8	9	10	11	12	1	2	3	4	5	6	7	8	9	10	11	12	1	2	3	4	5	6	7	8	9	10	11	12	1	2	3	4	5	6	7	8	9	10	11	12	1	2	3
Construction of DWFI System																																																															
Section A – A1	103	885	-67	0	3						39	39	39	39	39																																																	
Section A – A2	103	558	-63	0	3																		43	43	43	43	43																																					
Section A – A3	103	201	-54	0	3						52	52	52	52	52																																																	
Section A – A4	103	473	-61	0	3																		44	44	44	44	44																																					
Section B – B1	103	24	-36	0	3																																										70	70	70	70	70											
Section B – B2	103	91	-47	0	3																																																						58	58	58	58	58
Section B – B3	103	256	-56	0	3																														49	49	49	49	49																								
Construction of Rising Mains																																																															
Rising Mains	103	1007	-68	0	3	38	38	38	38	38						38	38	38	38	38	38	38						38	38	38	38																																	
Construction of Pumping Station																																																															
DWF Pumping Station	103	992	-68	0	3	38	38	38	38	38	38	38	38	38	38	38	38	38	38	38	38	38	38	38	38	38	38	38	38	38	38																																	
Predicted Noise Level during Daytime Period, dB(A)						41	41	41	41	41	52	52	52	52	52	41	41	41	41	41	41	41	47	47	47	47	47	41	41	41	41	0	0	0	49	49	49	49	49	0	0	0	0	0	0	0	70	70	70	70	70	0	0	0	0	0	0	0	58	58	58	58	58

Note:

[1] Distance Correction for PMEs = $10*\log(2*PI*r^2)$

[2] The figures are rounded-up to a whole number.

Construction Noise Assessment (Mitigated)

NSR14 CCC Chun Kwong Primary School (during normal school days)

Activity	SWL dB(A)	Distance m	Corr. for Distance dB(A) [1][2]	Corr. for Topo	Corr. for façade dB(A)	2021							2022												2023												2024												2025												2026		
						6	7	8	9	10	11	12	1	2	3	4	5	6	7	8	9	10	11	12	1	2	3	4	5	6	7	8	9	10	11	12	1	2	3	4	5	6	7	8	9	10	11	12	1	2	3	4	5	6	7	8	9	10	11	12	1	2	3
Construction of DWFI System																																																																
Section A – A1	103	907	-67	0	3						39	39	39	39	39																																																		
Section A – A2	103	590	-63	0	3																		42	42	42	42	42																																						
Section A – A3	103	154	-52	0	3						54	54	54	54	54																																																		
Section A – A4	103	424	-61	0	3																		45	45	45	45	45																																						
Section B – B1	103	25	-36	0	3																																										70	70	70	70	70												
Section B – B2	103	137	-51	0	3																																																							55	55	55	55	55
Section B – B3	103	394	-60	0	3																														46	46	46	46	46																										
Construction of Rising Mains																																																																
Rising Mains	103	1026	-68	0	3	37	37	37	37	37						37	37	37	37	37	37	37						37	37	37	37																																		
Construction of Pumping Station																																																																
DWF Pumping Station	103	1010	-68	0	3	38	38	38	38	38	38	38	38	38	38	38	38	38	38	38	38	38	38	38	38	38	38	38	38	38	38																																		
Predicted Noise Level during Daytime Period, dB(A)						41	41	41	41	41	54	54	54	54	54	41	41	41	41	41	41	41	47	47	47	47	47	41	41	41	41	0	0	0	46	46	46	46	46	0	0	0	0	0	0	0	70	70	70	70	70	0	0	0	0	0	0	0	55	55	55	55	55

Note:

[1] Distance Correction for PMEs = $10*\log(2*PI*r^2)$

[2] The figures are rounded-up to a whole number.

Construction Noise Assessment (Mitigated)

NSR14 CCC Chun Kwong Primary School (during examination period)

Activity	SWL dB(A)	Distance m	Corr. for Distance dB(A) [1][2]	Corr. for Topo	Corr. for façade dB(A)	2021							2022												2023												2024												2025												2026		
						6	7	8	9	10	11	12	1	2	3	4	5	6	7	8	9	10	11	12	1	2	3	4	5	6	7	8	9	10	11	12	1	2	3	4	5	6	7	8	9	10	11	12	1	2	3	4	5	6	7	8	9	10	11	12	1	2	3
Construction of DWFI System																																																																
Section A – A1	103	907	-67	0	3						39	39	39	39	39																																																		
Section A – A2	103	590	-63	0	3																		42	42	42	42	42																																						
Section A – A3	103	154	-52	0	3						54	54	54	54	54																																																	
Section A – A4	103	424	-61	0	3																		45	45	45	45	45																																						
Section B – B1	103	25	-36	0	3																																										N	N	N	N	N												
Section B – B2	103	137	-51	0	3																																																						55	55	55	55	55
Section B – B3	103	394	-60	0	3																													46	46	46	46	46																										
Construction of Rising Mains																																																																
Rising Mains	103	1026	-68	0	3	37	37	37	37	37						37	37	37	37	37	37	37						37	37	37	37																																		
Construction of Pumping Station																																																																
DWF Pumping Station	103	1010	-68	0	3	38	38	38	38	38	38	38	38	38	38	38	38	38	38	38	38	38	38	38	38	38	38	38	38	38	38																																	
Predicted Noise Level during Daytime Period, dB(A)						41	41	41	41	41	54	54	54	54	54	41	41	41	41	41	41	41	47	47	47	47	47	41	41	41	41	0	0	0	46	46	46	46	46	0	0	0	0	0	0	0	0	0	0	0	0	0	0	0	0	0	0	0	55	55	55	55	55

Note:

[1] Distance Correction for PMEs = $10*\log(2*PI*r^2)$

[2] The figures are rounded-up to a whole number.

[3] N: For Section B1, no PMEs shall be used during examination period.

Construction Noise Assessment (Mitigated)

NSR15 Tse King House

Activity	SWL dB(A)	Distance m	Corr. for Distance dB(A) [1][2]	Corr. for Topo	Corr. for façade dB(A)	2021							2022												2023												2024												2025												2026		
						6	7	8	9	10	11	12	1	2	3	4	5	6	7	8	9	10	11	12	1	2	3	4	5	6	7	8	9	10	11	12	1	2	3	4	5	6	7	8	9	10	11	12	1	2	3	4	5	6	7	8	9	10	11	12	1	2	3
Construction of DWFI System																																																															
Section A – A1	103	1045	-68	0	3						37	37	37	37	37																																																	
Section A – A2	103	722	-65	0	3																		40	40	40	40	40																																						
Section A – A3	103	45	-41	0	3						65	65	65	65	65																																																	
Section A – A4	103	310	-58	0	3																		48	48	48	48	48																																					
Section B – B1	103	84	-47	0	3																																										59	59	59	59	59											
Section B – B2	103	255	-56	0	3																																																						50	50	50	50	50
Section B – B3	103	421	-60	0	3																														45	45	45	45	45																								
Construction of Rising Mains																																																															
Rising Mains	103	1165	-69	0	3	36	36	36	36	36						36	36	36	36	36	36	36						36	36	36	36																																	
Construction of Pumping Station																																																															
DWF Pumping Station	103	1149	-69	0	3	36	36	36	36	36	36	36	36	36	36	36	36	36	36	36	36	36	36	36	36	36	36	36	36	36	36																																	
Predicted Noise Level during Daytime Period, dB(A)						39	39	39	39	39	65	65	65	65	65	39	39	39	39	39	39	39	49	49	49	49	49	39	39	39	39	0	0	0	45	45	45	45	45	0	0	0	0	0	0	0	59	59	59	59	59	0	0	0	0	0	0	0	50	50	50	50	50

Note:

[1] Distance Correction for PMEs = $10*\log(2*PI*r^2)$

[2] The figures are rounded-up to a whole number.

Construction Noise Assessment (Mitigated)

NSR16 On Ning Building

Activity	SWL dB(A)	Distance m	Corr. for Distance dB(A) [1][2]	Corr. for Topo	Corr. for façade dB(A)	2021							2022												2023												2024												2025												2026		
						6	7	8	9	10	11	12	1	2	3	4	5	6	7	8	9	10	11	12	1	2	3	4	5	6	7	8	9	10	11	12	1	2	3	4	5	6	7	8	9	10	11	12	1	2	3	4	5	6	7	8	9	10	11	12	1	2	3
Construction of DWFI System																																																															
Section A – A1	103	1106	-69	0	3						37	37	37	37	37																																																	
Section A – A2	103	784	-66	0	3																		40	40	40	40	40																																						
Section A – A3	103	34	-39	0	3						67	67	67	67	67																																																	
Section A – A4	103	248	-56	0	3																		50	50	50	50	50																																					
Section B – B1	103	145	-51	0	3																																											54	54	54	54	54											
Section B – B2	103	318	-58	0	3																																																							48	48	48	48	48
Section B – B3	103	484	-62	0	3																													44	44	44	44	44																										
Construction of Rising Mains																																																															
Rising Mains	103	1225	-70	0	3	36	36	36	36	36						36	36	36	36	36	36	36						36	36	36	36																																		
Construction of Pumping Station																																																															
DWF Pumping Station	103	1209	-70	0	3	36	36	36	36	36	36	36	36	36	36	36	36	36	36	36	36	36	36	36	36	36	36	36	36	36	36																																	
Predicted Noise Level during Daytime Period, dB(A)						39	39	39	39	39	67	67	67	67	67	39	39	39	39	39	39	39	50	50	50	50	50	39	39	39	39	0	0	0	44	44	44	44	44	0	0	0	0	0	0	0	54	54	54	54	54	0	0	0	0	0	0	0	48	48	48	48	48

Note:

[1] Distance Correction for PMEs = $10*\log(2*PI*r^2)$

[2] The figures are rounded-up to a whole number.

Construction Noise Assessment (Mitigated)

NSR17 Ho Wang Building

Activity	SWL dB(A)	Distance m	Corr. for Distance dB(A) [1][2]	Corr. for Topo	Corr. for façade dB(A)	2021							2022												2023												2024												2025												2026		
						6	7	8	9	10	11	12	1	2	3	4	5	6	7	8	9	10	11	12	1	2	3	4	5	6	7	8	9	10	11	12	1	2	3	4	5	6	7	8	9	10	11	12	1	2	3	4	5	6	7	8	9	10	11	12	1	2	3
Construction of DWFI System																																																															
Section A – A1	103	1109	-69	0	3						37	37	37	37	37																																																	
Section A – A2	103	795	-66	0	3																		40	40	40	40	40																																					
Section A – A3	103	16	-32	0	3						74	74	74	74	74																																																	
Section A – A4	103	227	-55	0	3																		51	51	51	51	51																																					
Section B – B1	103	159	-52	0	3																																										54	54	54	54	54											
Section B – B2	103	333	-58	0	3																																																							47	47	47	47	47
Section B – B3	103	499	-62	0	3																													44	44	44	44	44																									
Construction of Rising Mains																																																															
Rising Mains	103	1224	-70	0	3	36	36	36	36	36						36	36	36	36	36	36	36						36	36	36	36																																	
Construction of Pumping Station																																																															
DWF Pumping Station	103	1208	-70	0	3	36	36	36	36	36	36	36	36	36	36	36	36	36	36	36	36	36	36	36	36	36	36	36	36	36	36																																	
Predicted Noise Level during Daytime Period, dB(A)						39	39	39	39	39	74	74	74	74	74	39	39	39	39	39	39	39	51	51	51	51	51	39	39	39	39	0	0	0	44	44	44	44	44	0	0	0	0	0	0	0	54	54	54	54	54	0	0	0	0	0	0	0	47	47	47	47	47

Note:

[1] Distance Correction for PMEs = $10*\log(2*PI*r^2)$

[2] The figures are rounded-up to a whole number.

Construction Noise Assessment (Mitigated)

NSR18 Caritas Yuen Long Chan Chun Ha Secondary School (during normal school days)

Activity	SWL dB(A)	Distance m	Corr. for Distance dB(A) [1][2]	Corr. for Topo	Corr. for façade dB(A)	2021							2022												2023												2024												2025												2026		
						6	7	8	9	10	11	12	1	2	3	4	5	6	7	8	9	10	11	12	1	2	3	4	5	6	7	8	9	10	11	12	1	2	3	4	5	6	7	8	9	10	11	12	1	2	3	4	5	6	7	8	9	10	11	12	1	2	3
Construction of DWFI System																																																															
Section A – A1	103	1201	-70	0	3						36	36	36	36	36																																																	
Section A – A2	103	890	-67	0	3																		39	39	39	39	39																																						
Section A – A3	103	43	-41	0	3						65	65	65	65	65																																																	
Section A – A4	103	132	-50	0	3																		55	55	55	55	55																																					
Section B – B1	103	254	-56	0	3																																										50	50	50	50	50											
Section B – B2	103	428	-61	0	3																																																						45	45	45	45	45
Section B – B3	103	594	-63	0	3																													42	42	42	42	42																									
Construction of Rising Mains																																																															
Rising Mains	103	1315	-70	0	3	35	35	35	35	35						35	35	35	35	35	35	35						35	35	35	35																																	
Construction of Pumping Station																																																															
DWF Pumping Station	103	1230	-70	0	3	36	36	36	36	36	36	36	36	36	36	36	36	36	36	36	36	36	36	36	36	36	36	36	36	36	36																																	
Predicted Noise Level during Daytime Period, dB(A)						39	39	39	39	39	65	65	65	65	65	39	39	39	39	39	39	39	55	55	55	55	55	39	39	39	39	0	0	0	42	42	42	42	42	0	0	0	0	0	0	0	50	50	50	50	50	0	0	0	0	0	0	0	45	45	45	45	45

Note:

[1] Distance Correction for PMEs = $10*\log(2*PI*r^2)$

[2] The figures are rounded-up to a whole number.

Construction Noise Assessment (Mitigated)

NSR18 Caritas Yuen Long Chan Chun Ha Secondary School (during examination period)

Activity	SWL dB(A)	Distance m	Corr. for Distance dB(A) [1][2]	Corr. for Topo	Corr. for façade dB(A)	2021							2022												2023												2024												2025												2026		
						6	7	8	9	10	11	12	1	2	3	4	5	6	7	8	9	10	11	12	1	2	3	4	5	6	7	8	9	10	11	12	1	2	3	4	5	6	7	8	9	10	11	12	1	2	3	4	5	6	7	8	9	10	11	12	1	2	3
Construction of DWFI System																																																															
Section A – A1	103	1201	-70	0	3						36	36	36	36	36																																																	
Section A – A2	103	890	-67	0	3																		39	39	39	39	39																																						
Section A – A3	103	43	-41	0	3						N	N	N	N	N																																																	
Section A – A4	103	132	-50	0	3																		55	55	55	55	55																																						
Section B – B1	103	254	-56	0	3																																										50	50	50	50	50											
Section B – B2	103	428	-61	0	3																																																							45	45	45	45	45
Section B – B3	103	594	-63	0	3																													42	42	42	42	42																										
Construction of Rising Mains																																																															
Rising Mains	103	1315	-70	0	3	35	35	35	35	35						35	35	35	35	35	35	35						35	35	35	35																																		
Construction of Pumping Station																																																															
DWF Pumping Station	103	1230	-70	0	3	36	36	36	36	36	36	36	36	36	36	36	36	36	36	36	36	36	36	36	36	36	36	36	36	36	36																																	
Predicted Noise Level during Daytime Period, dB(A)						39	39	39	39	39	0	0	0	0	0	39	39	39	39	39	39	39	55	55	55	55	55	39	39	39	39	0	0	0	42	42	42	42	42	0	0	0	0	0	0	0	50	50	50	50	50	0	0	0	0	0	0	0	45	45	45	45	45

Note:

[1] Distance Correction for PMEs = $10*\log(2*PI*r^2)$

[2] The figures are rounded-up to a whole number.

[3] N: For Section A3, no PMEs shall be used during examination period.

Construction Noise Assessment (Mitigated)

NSR19 Sun Fai Court

Activity	SWL dB(A)	Distance m	Corr. for Distance dB(A) [1][2]	Corr. for Topo	Corr. for façade dB(A)	2021							2022												2023												2024												2025												2026		
						6	7	8	9	10	11	12	1	2	3	4	5	6	7	8	9	10	11	12	1	2	3	4	5	6	7	8	9	10	11	12	1	2	3	4	5	6	7	8	9	10	11	12	1	2	3	4	5	6	7	8	9	10	11	12	1	2	3
Construction of DWFI System																																																															
Section A – A1	103	1336	-70	0	3						35	35	35	35	35																																																	
Section A – A2	103	1023	-68	0	3																		37	37	37	37	37																																					
Section A – A3	103	143	-51	0	3						55	55	55	55	55																																																
Section A – A4	103	15	-31	0	3																		74	74	74	74	74																																					
Section B – B1	103	385	-60	0	3																																										46	46	46	46	46											
Section B – B2	103	559	-63	0	3																																																					43	43	43	43	43
Section B – B3	103	725	-65	0	3																													40	40	40	40	40																									
Construction of Rising Mains																																																															
Rising Mains	103	1450	-71	0	3	34	34	34	34	34						34	34	34	34	34	34	34						34	34	34	34																																	
Construction of Pumping Station																																																															
DWF Pumping Station	103	1434	-71	0	3	35	35	35	35	35	35	35	35	35	35	35	35	35	35	35	35	35	35	35	35	35	35	35	35	35	35																																	
Predicted Noise Level during Daytime Period, dB(A)						37	37	37	37	37	55	55	55	55	55	37	37	37	37	37	37	37	74	74	74	74	74	37	37	37	37	0	0	0	40	40	40	40	40	0	0	0	0	0	0	0	46	46	46	46	46	0	0	0	0	0	0	0	43	43	43	43	43

Note:

[1] Distance Correction for PMEs = $10*\log(2*PI*r^2)$

[2] The figures are rounded-up to a whole number.

Construction Noise Assessment (Mitigated)

NSR20 Ma Tin Tsuen - Kung Um Road

Activity	SWL dB(A)	Distance m	Corr. for Distance dB(A) [1][2]	Corr. for Topo	Corr. for façade dB(A)	2021							2022												2023												2024												2025												2026		
						6	7	8	9	10	11	12	1	2	3	4	5	6	7	8	9	10	11	12	1	2	3	4	5	6	7	8	9	10	11	12	1	2	3	4	5	6	7	8	9	10	11	12	1	2	3	4	5	6	7	8	9	10	11	12	1	2	3
Construction of DWFI System																																																															
Section A – A1	103	1430	-71	0	3						35	35	35	35	35																																																	
Section A – A2	103	1119	-69	0	3																		37	37	37	37	37																																						
Section A – A3	103	240	-56	0	3						50	50	50	50	50																																																	
Section A – A4	103	20	-34	0	3																		72	72	72	72	72																																						
Section B – B1	103	482	-62	0	3																																										44	44	44	44	44											
Section B – B2	103	656	-64	0	3																																																						41	41	41	41	41
Section B – B3	103	822	-66	0	3																													39	39	39	39	39																									
Construction of Rising Mains																																																															
Rising Mains	103	1543	-72	0	3	34	34	34	34	34						34	34	34	34	34	34	34						34	34	34	34																																	
Construction of Pumping Station																																																															
DWF Pumping Station	103	1527	-72	0	3	34	34	34	34	34	34	34	34	34	34	34	34	34	34	34	34	34	34	34	34	34	34	34	34	34	34																																	
Predicted Noise Level during Daytime Period, dB(A)						37	37	37	37	37	50	50	50	50	50	37	37	37	37	37	37	37	72	72	72	72	72	37	37	37	37	0	0	0	39	39	39	39	39	0	0	0	0	0	0	0	44	44	44	44	44	0	0	0	0	0	0	0	41	41	41	41	41

Note:

[1] Distance Correction for PMEs = $10*\log(2*PI*r^2)$

[2] The figures are rounded-up to a whole number.

Construction Noise Assessment (Mitigated)

NSR21 Yuen Long Villa

Activity	SWL dB(A)	Distance m	Corr. for Distance dB(A) [1][2]	Corr. for Topo	Corr. for façade dB(A)	2021							2022												2023												2024												2025												2026		
						6	7	8	9	10	11	12	1	2	3	4	5	6	7	8	9	10	11	12	1	2	3	4	5	6	7	8	9	10	11	12	1	2	3	4	5	6	7	8	9	10	11	12	1	2	3	4	5	6	7	8	9	10	11	12	1	2	3
Construction of DWFI System																																																															
Section A – A1	103	1397	-71	0	3						35	35	35	35	35																																																	
Section A – A2	103	1090	-69	0	3																		37	37	37	37	37																																						
Section A – A3	103	216	-55	0	3						51	51	51	51	51																																																	
Section A – A4	103	17	-33	0	3																		73	73	73	73	73																																						
Section B – B1	103	456	-61	0	3																																										44	44	44	44	44											
Section B – B2	103	630	-64	0	3																																																						42	42	42	42	42
Section B – B3	103	796	-66	0	3																													40	40	40	40	40																									
Construction of Rising Mains																																																															
Rising Mains	103	1507	-72	0	3	34	34	34	34	34						34	34	34	34	34	34	34						34	34	34	34																																	
Construction of Pumping Station																																																															
DWF Pumping Station	103	1492	-71	0	3	34	34	34	34	34	34	34	34	34	34	34	34	34	34	34	34	34	34	34	34	34	34	34	34	34	34																																	
Predicted Noise Level during Daytime Period, dB(A)						37	37	37	37	37	51	51	51	51	51	37	37	37	37	37	37	37	73	73	73	73	73	37	37	37	37	0	0	0	40	40	40	40	40	0	0	0	0	0	0	0	44	44	44	44	44	0	0	0	0	0	0	0	42	42	42	42	42

Note:

[1] Distance Correction for PMEs = $10*\log(2*PI*r^2)$

[2] The figures are rounded-up to a whole number.

Construction Noise Assessment (Mitigated)

NSR22 Lung Tin Tsuen

Activity	SWL dB(A)	Distance m	Corr. for Distance dB(A) [1][2]	Corr. for Topo	Corr. for façade dB(A)	2021							2022												2023												2024												2025												2026		
						6	7	8	9	10	11	12	1	2	3	4	5	6	7	8	9	10	11	12	1	2	3	4	5	6	7	8	9	10	11	12	1	2	3	4	5	6	7	8	9	10	11	12	1	2	3	4	5	6	7	8	9	10	11	12	1	2	3
Construction of DWFI System																																																															
Section A – A1	103	1539	-72	0	3						34	34	34	34	34																																																	
Section A – A2	103	1227	-70	0	3																		36	36	36	36	36																																						
Section A – A3	103	347	-59	0	3						47	47	47	47	47																																																	
Section A – A4	103	94	-47	0	3																		58	58	58	58	58																																					
Section B – B1	103	589	-63	0	3																																										42	42	42	42	42											
Section B – B2	103	763	-66	0	3																																																						40	40	40	40	40
Section B – B3	103	929	-67	0	3																													38	38	38	38	38																									
Construction of Rising Mains																																																															
Rising Mains	103	1652	-72	0	3	33	33	33	33	33						33	33	33	33	33	33	33						33	33	33	33																																	
Construction of Pumping Station																																																															
DWF Pumping Station	103	1636	-72	0	3	33	33	33	33	33	33	33	33	33	33	33	33	33	33	33	33	33	33	33	33	33	33	33	33	33	33																																	
Predicted Noise Level during Daytime Period, dB(A)						36	36	36	36	36	47	47	47	47	47	36	36	36	36	36	36	36	58	58	58	58	58	36	36	36	36	0	0	0	38	38	38	38	38	0	0	0	0	0	0	0	42	42	42	42	42	0	0	0	0	0	0	0	40	40	40	40	40

Note:

[1] Distance Correction for PMEs = $10*\log(2*PI*r^2)$

[2] The figures are rounded-up to a whole number.

Construction Noise Assessment (Mitigated)

NSR23 Wang Chau Lam Uk Tsuen

Activity	SWL dB(A)	Distance m	Corr. for Distance dB(A) [1][2]	Corr. for Topo	Corr. for façade dB(A)	2021							2022											
						6	7	8	9	10	11	12	1	2	3	4	5	6	7	8	9	10	11	12
Construction of DWFI System																								
Section A – A1	103	85	-47	0	3						59	59	59	59	59									
Section A – A2	103	233	-55	0	3																		50	50
Section A – A3	103	1180	-69	0	3						36	36	36	36	36									
Section A – A4	103	1446	-71	0	3																		34	34
Section B – B1	103	996	-68	0	3																			
Section B – B2	103	820	-66	0	3																			
Section B – B3	103	665	-64	0	3																			
Construction of Rising Mains																								
Rising Mains	103	100	-48	0	3	58	58	58	58	58						58	58	58	58	58	58	58		
Construction of Pumping Station																								
DWF Pumping Station	103	145	-51	0	3	54	54	54	54	54	54	54	54	54	54	54	54	54	54	54	54	54	54	54
Predicted Noise Level during Daytime Period, dB(A)						59	59	59	59	59	60	60	60	60	60	59	59	59	59	59	59	59	56	56

Activity	2023												2024											
	1	2	3	4	5	6	7	8	9	10	11	12	1	2	3	4	5	6	7	8	9	10	11	12
Construction of DWFI System																								
Section A – A1																								
Section A – A2	50	50	50																					
Section A – A3																								
Section A – A4	34	34	34																					
Section B – B1																							38	38
Section B – B2																								
Section B – B3											41	41	41	41	41									
Construction of Rising Mains																								
Rising Mains				58	58	58	58																	
Construction of Pumping Station																								
DWF Pumping Station	54	54	54	54	54	54	54																	
Predicted Noise Level during Daytime Period, dB(A)	56	56	56	59	59	59	59	0	0	0	41	41	41	41	41	0	0	0	0	0	0	0	38	38

Activity	2025												2026		
	1	2	3	4	5	6	7	8	9	10	11	12	1	2	3
Construction of DWFI System															
Section A – A1															
Section A – A2															
Section A – A3															
Section A – A4															
Section B – B1	38	38	38												
Section B – B2											39	39	39	39	39
Section B – B3															
Construction of Rising Mains															
Rising Mains															
Construction of Pumping Station															
DWF Pumping Station															
Predicted Noise Level during Daytime Period, dB(A)	38	38	38	0	0	0	0	0	0	0	39	39	39	39	39

Note:

[1] Distance Correction for PMEs = $10*\log(2*PI*r^2)$

[2] The figures are rounded-up to a whole number.

Construction Noise Assessment (Mitigated)

NSR24 Wang Chau Tung Tau Wai

Activity	SWL dB(A)	Distance m	Corr. for Distance dB(A) [1][2]	Corr. for Topo	Corr. for façade dB(A)	2021							2022												2023												2024												2025												2026		
						6	7	8	9	10	11	12	1	2	3	4	5	6	7	8	9	10	11	12	1	2	3	4	5	6	7	8	9	10	11	12	1	2	3	4	5	6	7	8	9	10	11	12	1	2	3	4	5	6	7	8	9	10	11	12	1	2	3
Construction of DWFI System																																																															
Section A – A1	103	128	-50	0	3						55	55	55	55	55																																																	
Section A – A2	103	294	-57	0	3																		48	48	48	48	48																																						
Section A – A3	103	1242	-70	0	3						36	36	36	36	36																																																	
Section A – A4	103	1508	-72	0	3																		34	34	34	34	34																																					
Section B – B1	103	1058	-68	0	3																																										37	37	37	37	37											
Section B – B2	103	881	-67	0	3																																																						39	39	39	39	39
Section B – B3	103	726	-65	0	3																													40	40	40	40	40																									
Construction of Rising Mains																																																															
Rising Mains	103	103	-48	0	3	57	57	57	57	57						57	57	57	57	57	57	57						57	57	57	57																																	
Construction of Pumping Station																																																															
DWF Pumping Station	103	161	-52	0	3	54	54	54	54	54	54	54	54	54	54	54	54	54	54	54	54	54	54	54	54	54	54	54	54	54	54																																	
Predicted Noise Level during Daytime Period, dB(A)						59	59	59	59	59	58	58	58	58	58	59	59	59	59	59	59	59	55	55	55	55	55	59	59	59	59	0	0	0	40	40	40	40	40	0	0	0	0	0	0	0	37	37	37	37	37	0	0	0	0	0	0	0	39	39	39	39	39

Note:

[1] Distance Correction for PMEs = $10*\log(2*PI*r^2)$

[2] The figures are rounded-up to a whole number.

Construction Noise Assessment (Mitigated)

NSR25 Hong Kong School of Motoring - Yuen Long Road Safety Centre

Activity	SWL dB(A)	Distance m	Corr. for Distance dB(A) [1][2]	Corr. for Topo	Corr. for façade dB(A)	2021							2022												2023												2024												2025												2026		
						6	7	8	9	10	11	12	1	2	3	4	5	6	7	8	9	10	11	12	1	2	3	4	5	6	7	8	9	10	11	12	1	2	3	4	5	6	7	8	9	10	11	12	1	2	3	4	5	6	7	8	9	10	11	12	1	2	3
Construction of DWFI System																																																															
Section A – A1	103	505	-62	0	3						44	44	44	44	44																																																	
Section A – A2	103	702	-65	0	3																		41	41	41	41	41																																					
Section A – A3	103	1538	-72	0	3						34	34	34	34	34																																																	
Section A – A4	103	1779	-73	0	3																		33	33	33	33	33																																					
Section B – B1	103	1374	-71	0	3																																										35	35	35	35	35											
Section B – B2	103	1221	-70	0	3																																																						36	36	36	36	36
Section B – B3	103	1092	-69	0	3																													37	37	37	37	37																									
Construction of Rising Mains																																																															
Rising Mains	103	256	-56	0	3	50	50	50	50	50						50	50	50	50	50	50	50						50	50	50	50																																	
Construction of Pumping Station																																																															
DWF Pumping Station	103	423	-61	0	3	45	45	45	45	45	45	45	45	45	45	45	45	45	45	45	45	45	45	45	45	45	45	45	45	45	45																																	
Predicted Noise Level during Daytime Period, dB(A)						51	51	51	51	51	48	48	48	48	48	51	51	51	51	51	51	51	47	47	47	47	47	51	51	51	51	0	0	0	37	37	37	37	37	0	0	0	0	0	0	0	35	35	35	35	35	0	0	0	0	0	0	0	36	36	36	36	36

Note:

[1] Distance Correction for PMEs = $10*\log(2*PI*r^2)$

[2] The figures are rounded-up to a whole number.

Construction Noise Assessment (Mitigated)

R1 Sol City (Planned)

Activity	SWL dB(A)	Distance m	Corr. for Distance dB(A) [1][2]	Corr. for Topo	Corr. for façade dB(A)	2021							2022												2023												2024												2025												2026		
						6	7	8	9	10	11	12	1	2	3	4	5	6	7	8	9	10	11	12	1	2	3	4	5	6	7	8	9	10	11	12	1	2	3	4	5	6	7	8	9	10	11	12	1	2	3	4	5	6	7	8	9	10	11	12	1	2	3
Construction of DWFI System																																																															
Section A – A1	103	633	-64	0	3						42	42	42	42	42																																																	
Section A – A2	103	293	-57	0	3																		48	48	48	48	48																																					
Section A – A3	103	470	-61	0	3						44	44	44	44	44																																																	
Section A – A4	103	742	-65	0	3																		40	40	40	40	40																																					
Section B – B1	103	283	-57	0	3																																										49	49	49	49	49											
Section B – B2	103	105	-48	0	3																																																						57	57	57	57	57
Section B – B3	103	24	-35	0	3																													70	70	70	70	70																									
Construction of Rising Mains																																																															
Rising Mains	103	762	-66	0	3	40	40	40	40	40						40	40	40	40	40	40	40						40	40	40	40																																	
Construction of Pumping Station																																																															
DWF Pumping Station	103	747	-65	0	3	40	40	40	40	40	40	40	40	40	40	40	40	40	40	40	40	40	40	40	40	40	40	40	40	40	40																																	
Predicted Noise Level during Daytime Period, dB(A)						43	43	43	43	43	47	47	47	47	47	43	43	43	43	43	43	43	49	49	49	49	49	43	43	43	43	0	0	0	70	70	70	70	70	0	0	0	0	0	0	0	49	49	49	49	49	0	0	0	0	0	0	0	57	57	57	57	57

Note:

[1] Distance Correction for PMEs = $10*\log(2*PI*r^2)$

[2] The figures are rounded-up to a whole number.

Annex 5C-8: Cumulative Construction Noise Impact

Predicted Noise Levels from Construction of the Project (Mitigated)

NSR	Description	EIAO-TM Noise Criteria, dB(A)	Predicted Construction Noise Level, db(A)																																																								
			2021							2022												2023												2024												2025												2026		
			6	7	8	9	10	11	12	1	2	3	4	5	6	7	8	9	10	11	12	1	2	3	4	5	6	7	8	9	10	11	12	1	2	3	4	5	6	7	8	9	10	11	12	1	2	3	4	5	6	7	8	9	10	11	12	1	2	3
NSR01	Tung Tau Wai San Tsuen	75	63	63	63	63	63	57	57	57	57	57	63	63	63	63	63	63	63	55	55	55	55	55	63	63	63	63	0	0	0	39	39	39	39	39	0	0	0	0	0	0	0	37	37	37	37	37	0	0	0	0	0	0	0	38	38	38	38	38
NSR02	Shan Pui Chung Hau Tsuen	75	67	67	67	67	67	60	60	60	60	60	67	67	67	67	67	67	67	59	59	59	59	59	67	67	67	67	0	0	0	40	40	40	40	40	0	0	0	0	0	0	0	37	37	37	37	37	0	0	0	0	0	0	0	38	38	38	38	38
NSR03	Twin Regency	75	74	74	74	74	74	72	72	72	72	72	74	74	74	74	74	74	74	72	72	72	72	72	74	74	74	74	0	0	0	41	41	41	41	41	0	0	0	0	0	0	0	38	38	38	38	38	0	0	0	0	0	0	0	39	39	39	39	39
NSR04	Yuk Yat Garden	75	53	53	53	53	53	57	57	57	57	57	53	53	53	53	53	53	53	60	60	60	60	60	53	53	53	53	0	0	0	44	44	44	44	44	0	0	0	0	0	0	0	39	39	39	39	39	0	0	0	0	0	0	0	41	41	41	41	41
NSR05	Wang Fu Court	75	55	55	55	55	55	60	60	60	60	60	55	55	55	55	55	55	55	60	60	60	60	60	55	55	55	55	0	0	0	44	44	44	44	44	0	0	0	0	0	0	0	40	40	40	40	40	0	0	0	0	0	0	0	42	42	42	42	42
NSR06	Yeung Uk San Tsuen	75	49	49	49	49	49	51	51	51	51	51	49	49	49	49	49	49	49	60	60	60	60	60	49	49	49	49	0	0	0	46	46	46	46	46	0	0	0	0	0	0	0	41	41	41	41	41	0	0	0	0	0	0	0	43	43	43	43	43
NSR07	Yuen Long Long Ping Estate Wai Chow School	70/65	47	47	47	47	47	49	49	49	49	49	47	47	47	47	47	47	47	57	57	57	57	57	47	47	47	47	0	0	0	49	49	49	49	49	0	0	0	0	0	0	0	42	42	42	42	42	0	0	0	0	0	0	0	45	45	45	45	45
NSR08	The Spectra	75	46	46	46	46	46	49	49	49	49	49	46	46	46	46	46	46	46	61	61	61	61	61	46	46	46	46	0	0	0	53	53	53	53	53	0	0	0	0	0	0	0	44	44	44	44	44	0	0	0	0	0	0	0	47	47	47	47	47
NSR09	Tai Kiu Tsuen	75	44	44	44	44	44	47	47	47	47	47	44	44	44	44	44	44	44	51	51	51	51	51	44	44	44	44	0	0	0	71	71	71	71	71	0	0	0	0	0	0	0	47	47	47	47	47	0	0	0	0	0	0	0	53	53	53	53	53
NSR10	Fuk Yip Building	75	42	42	42	42	42	48	48	48	48	48	42	42	42	42	42	42	42	48	48	48	48	48	42	42	42	42	0	0	0	59	59	59	59	59	0	0	0	0	0	0	0	52	52	52	52	52	0	0	0	0	0	0	0	73	73	73	73	73
NSR11	Yuen Fat House	75	42	42	42	42	42	49	49	49	49	49	42	42	42	42	42	42	42	47	47	47	47	47	42	42	42	42	0	0	0	53	53	53	53	53	0	0	0	0	0	0	0	58	58	58	58	58	0	0	0	0	0	0	0	74	74	74	74	74
NSR12	Healey Building	75	41	41	41	41	41	50	50	50	50	50	41	41	41	41	41	41	41	47	47	47	47	47	41	41	41	41	0	0	0	52	52	52	52	52	0	0	0	0	0	0	0	60	60	60	60	60	0	0	0	0	0	0	0	68	68	68	68	68
NSR13	Wah Shing Mansion	75	41	41	41	41	41	52	52	52	52	52	41	41	41	41	41	41	41	47	47	47	47	47	41	41	41	41	0	0	0	49	49	49	49	49	0	0	0	0	0	0	0	70	70	70	70	70	0	0	0	0	0	0	0	58	58	58	58	58
NSR14	CCC Chun Kwong Primary School	70 (normal school days)	41	41	41	41	41	54	54	54	54	54	41	41	41	41	41	41	41	47	47	47	47	47	41	41	41	41	0	0	0	63	46	46	46	46	0	0	0	0	0	0	0	70	70	70	70	70	0	0	0	0	0	0	0	55	55	55	55	55
		65 (examination period)	41	41	41	41	41	54	54	54	54	54	41	41	41	41	41	41	41	47	47	47	47	47	41	41	41	41	0	0	0	46	46	46	46	46	0	0	0	0	0	0	0	0	0	0	0	0	0	0	0	0	0	0	0	55	55	55	55	55
NSR15	Tse King House	75	39	39	39	39	39	65	65	65	65	65	39	39	39	39	39	39	39	49	49	49	49	49	39	39	39	39	0	0	0	45	45	45	45	45	0	0	0	0	0	0	0	59	59	59	59	59	0	0	0	0	0	0	0	50	50	50	50	50
NSR16	On Ning Building	75	39	39	39	39	39	67	67	67	67	67	39	39	39	39	39	39	39	50	50	50	50	50	39	39	39	39	0	0	0	44	44	44	44	44	0	0	0	0	0	0	0	54	54	54	54	54	0	0	0	0	0	0	0	48	48	48	48	48
NSR17	Ho Wang Building	75	39	39	39	39	39	74	74	74	74	74	39	39	39	39	39	39	39	51	51	51	51	51	39	39	39	39	0	0	0	44	44	44	44	44	0	0	0	0	0	0	0	54	54	54	54	54	0	0	0	0	0	0	0	47	47	47	47	47
NSR18	Caritas Yuen Long Chan Chun Ha Secondary School	70 (normal school days)	39	39	39	39	39	65	65	65	65	65	39	39	39	39	39	39	39	55	55	55	55	55	39	39	39	39	0	0	0	42	42	42	42	42	0	0	0	0	0	0	0	50	50	50	50	50	0	0	0	0	0	0	0	45	45	45	45	45
		65 (examination period)	39	39	39	39	39	0	0	0	0	0	39	39	39	39	39	39	39	55	55	55	55	55	39	39	39	39	0	0	0	42	42	42	42	42	0	0	0	0	0	0	0	50	50	50	50	50	0	0	0	0	0	0	0	45	45	45	45	45
NSR19	Sun Fai Court	75	37	37	37	37	37	55	55	55	55	55	37	37	37	37	37	37	37	74	74	74	74	74	37	37	37	37	0	0	0	40	40	40	40	40	0	0	0	0	0	0	0	46	46	46	46	46	0	0	0	0	0	0	0	43	43	43	43	43
NSR20	Ma Tin Tsuen - Kung Um Road	75	37	37	37	37	37	50	50	50	50	50	37	37	37	37	37	37	37	72	72	72	72	72	37	37	37	37	0	0	0	39	39	39	39	39	0	0	0	0	0	0	0	44	44	44	44	44	0	0	0	0	0	0	0	41	41	41	41	41
NSR21	Yuen Long Villa	75	37	37	37	37	37	51	51	51	51	51	37	37	37	37	37	37	37	73	73	73	73	73	37	37	37	37	0	0	0	40	40	40	40	40	0	0	0	0	0	0	0	44	44	44	44	44	0	0	0	0	0	0	0	42	42	42	42	42
NSR22	Lung Tin Tsuen	75	36	36	36	36	36	47	47	47	47	47	36	36	36	36	36	36	36	58	58	58	58	58	36	36	36	36	0	0	0	38	38	38	38	38	0	0	0	0	0	0	0	42	42	42	42	42	0	0	0	0	0	0	0	40	40	40	40	40
NSR23	Wang Chau Lam Uk Tsuen	75	59	59	59	59	59	60	60	60	60	60	59	59	59	59	59	59	59	56	56	56	56	56	59	59	59	59	0	0	0	41	41	41	41	41	0	0	0	0	0	0	0	38	38	38	38	38	0	0	0	0	0	0	0	39	39	39	39	39
NSR24	Wang Chau Tung Tau Wai	75	59	59	59	59	59	58	58	58	58	58	59	59	59	59	59	59	59	55	55	55	55	55	59	59	59	59	0	0	0	40	40	40	40	40	0	0	0	0	0	0	0	37	37	37	37	37	0	0	0	0	0	0	0	39	39	39	39	39
NSR25	Hong Kong School of Motoring - Yuen Long Road Safety Centre	70/65	51	51	51	51	51	48	48	48	48	48	51	51	51	51	51	51	51	47	47	47	47	47	51	51	51	51	0	0	0	37	37	37	37	37	0	0	0	0	0	0	0	35	35	35	35	35	0	0	0	0	0	0	0	36	36	36	36	36
R1	Sol City (Planned)	75	43	43	43	43	43	47	47	47	47	47	43	43	43	43	43	43	43	49	49	49	49	49	43	43	43	43	0	0	0	70	70	70	70	70	0	0	0	0	0	0	0	49	49	49	49	49	0	0	0	0	0	0	0	57	57	57	57	57

*Predicted Noise Levels from Construction of "Elevated Pedestrian Corridor in Yuen Long Town Connecting with Long Ping Station" (Mitigated)**

NSR	Description	NSR ID in the Concurrent Project	Predicted Construction Noise Level, db(A)																																																								
			2021							2022												2023												2024												2025												2026		
			6	7	8	9	10	11	12	1	2	3	4	5	6	7	8	9	10	11	12	1	2	3	4	5	6	7	8	9	10	11	12	1	2	3	4	5	6	7	8	9	10	11	12	1	2	3	4	5	6	7	8	9	10	11	12	1	2	3
NSR09	Tai Kiu Tsuen	N09	50	44	42	40	39	61	61	61	60	60	73	73	73	61	65	65	65	68	68	69	64	64	53	53	53	53	49	49	49	49	55	55	55	69	69	69	0	0	0	0	0	0	0	0	0	0	0	0	0	0	0	0	0	0	0	0	0	0
NSR12	Healey Building	N05	57	70	58	48	46	74	74	74	74	74	74	74	74	74	74	74	74	74	74	74	74	74	64	64	64	64	58	58	58	58	73	73	73	62	62	62	0	0	0	0	0	0	0	0	0	0	0	0	0	0	0	0	0	0	0	0	0	0
NSR14	CCC Chun Kwong Primary School	N08	58	52	57	55	51	66	66	65	67	67	67	67	61	67	68	68	68	64	68	61	68	61	60	60	60	60	59	59	59	59	62	62	62	63	70	70	0	0	0	0	0	0	0	0	0	0	0	0	0	0	0	0	0	0	0	0	0	0
NSR15	Tse King House	N14	65	46	49	60	64	70	70	71	71	71	70	70	69	70	70	70	70	69	71	69	71	69	56	56	56	56	60	60	60	60	66	66	66	64	64	64	0	0	0	0	0	0	0	0	0	0	0	0	0	0	0	0	0	0	0	0	0	0
NSR16	On Ning Building	N17	55	43	45	51	56	61	61	63	63	63	63	63	62	63	63	63	63	62	64	62	64	62	50	50	50	50	54	54	54	54	57	57	57	64	64	64	0	0	0	0	0	0	0	0	0	0	0	0	0	0	0	0	0	0	0	0	0	0
NSR17	Ho Wang Building	N16	54	44	46	52	56	62	62	65	65	65	65	65	63	64	65	65	65	63	65	63	65	63	51	51	51	51	56	56	56	56	59	59	59	68	68	68	0	0	0	0	0	0	0	0	0	0	0	0	0	0	0	0	0	0	0	0	0	0
NSR18	Caritas Yuen Long Chan Chun Ha Secondary School	N18	48	41	42	46	48	56	56	57	57	57	57	57	55	57	57	57	57	55	58	55	58	55	46	46	46	46	48	48	48	48	52	52	52	58	58	58	0	0	0	0	0	0	0	0	0	0	0	0	0	0	0	0	0	0	0	0	0	0

Note: the data is adjusted 2-year forward to match the latest implementation programme

Predicted Cumulative Construction Noise Levels at Representative NSRs

NSR	Description	EIAO-TM Noise Criteria, dB(A)	Predicted Construction Noise Level, db(A)																																																									Max. Predicted Cumulative CNL, db(A)
			2021							2022												2023												2024												2025												2026			
			6	7	8	9	10	11	12	1	2	3	4	5	6	7	8	9	10	11	12	1	2	3	4	5	6	7	8	9	10	11	12	1	2	3	4	5	6	7	8	9	10	11	12	1	2	3	4	5	6	7	8	9	10	11	12	1	2	3	
NSR09	Tai Kiu Tsuen	75	51	47	46	46	45	61	61	61	60	60	73	73	73	61	65	65	65	68	68	69	64	64	54	54	54	54	49	49	49	71	71	71	71	73	69	69	0	0	0	0	0	47	47	47	47	47	0	0	0	0	0	0	0	53	53	53	53	53	73
NSR12	Healey Building	75	57	70	58	49	47	74	74	74	74	74	74	74	74	74	74	74	74	74	74	74	74	74	64	64	64	64	58	58	58	59	73	73	73	62	62	62	0	0	0	0	0	60	60	60	60	60	0	0	0	0	0	0	0	68	68	68	68	68	74
NSR14	CCC Chun Kwong Primary School	70 (normal school days)	58	52	57	55	51	66	66	65	67	67	67	67	61	67	68	68	68	64	68	61	68	61	60	60	60	60	59	59	59	64	62	62	62	63	70	70	0	0	0	0	0	70	70	70	70	70	0	0	0	0	0	0	0	55	55	55	55	55	70
		65 (examination period)	58	41	41	41	51	66	54	65	54	67	41	41	61	41	41	41	68	64	47	61	47	61	41	41	60	41	0	0	59	59	46	62	46	63	0	0	0	0	0	0	0	0	0	0	0	0	0	0	0	0	0	0	0	55	55	55	55	55	68
NSR15	Tse King House	75	65	47	49	60	64	71	71	72	72	72	70	70	69	70	70	70	70	69	71	69	71	69	56	56	56	56	60	60	60	60	66	66	66	64	64	64	0	0	0	0	0	59	59	59	59	59	0	0	0	0	0	0	0	50	50	50	50	50	72
NSR16	On Ning Building	75	55	44	46	51	56	68	68	69	69	69	63	63	62	63	63	63	63	62	64	62	64	62	50	50	50	50	54	54	54	54	57	57	57	64	64	64	0	0	0	0	0	54	54	54	54	54	0	0	0	0	0	0	0	48	48	48	48	48	69
NSR17	Ho Wang Building	75	54	45	47	52	56	74	74	74	74	74	65	65	63	64	65	65	65	63	65	63	65	63	51	51	51	51	56	56	56	56	59	59	59	68	68	68	0	0	0	0	0	54	54	54	54	54	0	0	0	0	0	0	0	47	47	47	47	47	74
NSR18	Caritas Yuen Long Chan Chun Ha Secondary School	70 (normal school days)	48	43	44	47	48	66	66	66	66	66	57	57	55	57	57	57	57	58	60	58	60	58	47	47	47	47	48	48	48	49	52	52	52	58	58	58	0	0	0	0	0	50	50	50	50	50	0	0	0	0	0	0	0	45	45	45	45	45	66
		65 (examination period)	48	41	42	46	48	56	56	57	57	57	57	57	55	57	57	57	57	58	58	58	58	58	46	46	47	46	48	48	48	49	52	52	52	58	58	58	0	0	0	0	0	0	0	0	0	0	0	0	0	0	0	0	0	0	0	0	0	0	58

Predicted Noise Level exceeded the corresponding EIAO-TM noise criteria

In the approved EIA Report of "Elevated Pedestrian Corridor in Yuen Long Town Connecting with Long Ping Station (EPC)" (AEIAR-200/2016), the examination periods in October/November, January, March and June is assumed.

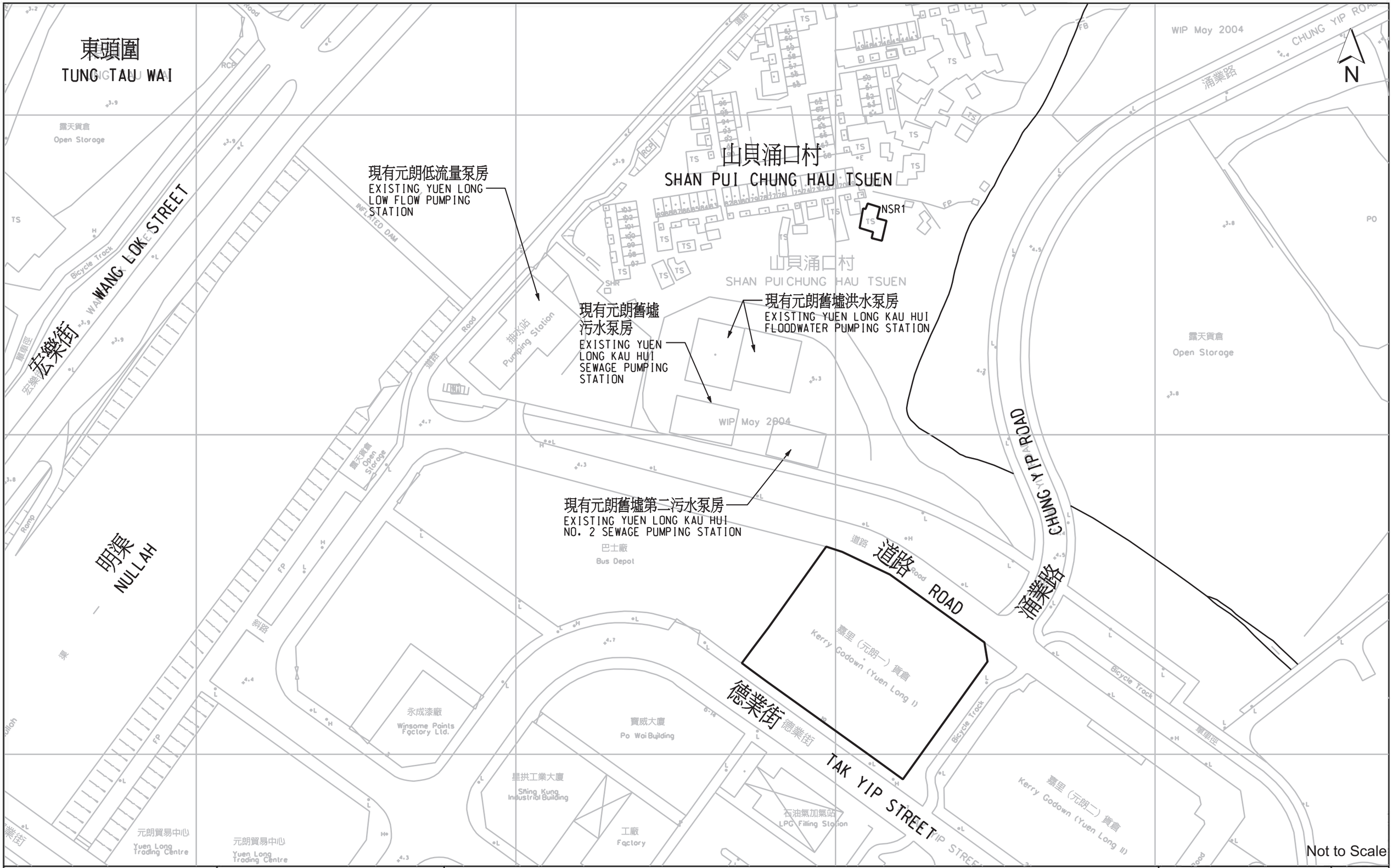

Drainage Services Department
渠務署

BLACK & VEATCH
Building a world of difference.

LOCATIONS OF EXISTING PUMPING FACILITIES AND NSR PRESENTED IN THE APPROVED PROJECT PROFILE (PP-371/2008)

DRAWING NO.	Annex 5C-9
REVISION	
SCALE:	NOT TO SCALE
DATE:	
DESIGNED	
CHECKED	

Annex 5C-10: Cumulative Noise Impact Assessment during Operation

NSR	Items	Number of Items	Sound Power Level (SWL)/Item, dB(A)	Total SWL, dB(A)	Distance (D)[3], m	Corrections, dB(A)				Individual SPL, dB(A)	Total SPL from each pumping station, dB(A)	Cumulative SPL, dB(A)	ANL, dB(A)	Compliance (Y/N)
						Screening[4]	Distance	Tonality	Façade					
NSR 1	**Proposed DWF pumping station:**													
	Mechanical screens[1]	2	89	92	148	-20	-51.4	3	3	26.6				
	Submersible pumps[2]	2	85	88	148	-20	-51.4	3	3	22.6				
	Exhaust fan for deodourizer[2] - Northwest facing	1	73	73	148	0	-51.4	3	3	27.6				
	Exhaust fan for ventilation[2] - Northeast facing	1	73	73	148	0	-51.4	3	3	27.6	33			
	Cumulative Impact with existing pumping stations:													
	Existing Yuen Long Kau Hui No. 2 Sewage Pumping Station[5]	-	-	61	203	0	-54.1	3	3	12.9	13			
	Existing Kau Hui Sewage Pumping Station[5]	-	-	69	175	0	-52.8	3	3	22.2	22			
	Existing Low-flow Pumping Station[5]	-	-	68	120	0	-49.6	0	3	21.4	21	33	55	Y
NSR 2	**Proposed DWF pumping station:**													
	Mechanical screens[1]	2	89	92	96	-20	-47.6	3	3	30.4				
	Submersible pumps[2]	2	85	88	96	-20	-47.6	3	3	26.4				
	Exhaust fan for deodourizer[2] - Northwest facing	1	73	73	96	-10	-47.6	3	3	21.4				
	Exhaust fan for ventilation[2] - Northeast facing	1	73	73	96	-10	-47.6	3	3	21.4	33			
	Cumulative Impact with existing pumping stations:													
	Existing Yuen Long Kau Hui No. 2 Sewage Pumping Station[5]	-	-	61	70	0	-44.9	3	3	22.1	22			
	Existing Kau Hui Sewage Pumping Station[5]	-	-	69	45	0	-41.0	3	3	34.0	34			
	Existing Low-flow Pumping Station[5]	-	-	68	23	0	-35.2	0	3	35.8	36	39	55	Y
NSR 3	**Proposed DWF pumping station:**													
	Mechanical screens[1]	2	89	92	22	-20	-34.8	3	3	43.2				
	Submersible pumps[2]	2	85	88	22	-20	-34.8	3	3	39.2				
	Exhaust fan for deodourizer[2] - Northwest facing	1	73	73	22	-10	-34.8	3	3	34.2				
	Exhaust fan for ventilation[2] - Northeast facing	1	73	73	22	-10	-34.8	3	3	34.2	45			
	Cumulative Impact with existing pumping stations:													
	Existing Yuen Long Kau Hui No. 2 Sewage Pumping Station[5]	-	-	61	103	0	-48.2	3	3	18.8	19			
	Existing Kau Hui Sewage Pumping Station[5]	-	-	69	70	0	-44.9	3	3	30.1	30			
	Existing Low-flow Pumping Station[5]	-	-	68	34	0	-38.6	0	3	32.4	32	46	55	Y
NSR 4	**Proposed DWF pumping station:**													
	Mechanical screens[1]	2	89	92	247	-20	-55.8	3	3	22.2				
	Submersible pumps[2]	2	85	88	247	-20	-55.8	3	3	18.2				
	Exhaust fan for deodourizer[2] - Northwest facing	1	73	73	247	0	-55.8	3	3	23.2				
	Exhaust fan for ventilation[2] - Northeast facing	1	73	73	247	-10	-55.8	3	3	13.2	27			
	Cumulative Impact with existing pumping stations:													
	Existing Yuen Long Kau Hui No. 2 Sewage Pumping Station[5]	-	-	61	371	0	-59.4	3	3	7.6	8			
	Existing Kau Hui Sewage Pumping Station[5]	-	-	69	340	0	-58.6	3	3	16.4	16			
	Existing Low-flow Pumping Station[5]	-	-	68	296	0	-57.4	0	3	13.6	14	27	50	Y

NSR 5	**Proposed DWF pumping station:**													
	Mechanical screens[1]	2	89	92	190	-20	-53.6	3	3	24.5				
	Submersible pumps[2]	2	85	88	190	-20	-53.6	3	3	20.5				
	Exhaust fan for deodourizer[2] - Northwest facing	1	73	73	190	-10	-53.6	3	3	15.4				
	Exhaust fan for ventilation[2] - Northeast facing	1	73	73	190	-10	-53.6	3	3	15.4	27			
	Cumulative Impact with existing pumping stations:													
	Existing Yuen Long Kau Hui No. 2 Sewage Pumping Station[5]	-	-	61	283	0	-57.0	3	3	10.0	10			
	Existing Kau Hui Sewage Pumping Station[5]	-	-	69	260	0	-56.3	3	3	18.7	19			
	Existing Low-flow Pumping Station[5]	-	-	68	237	0	-55.5	0	3	15.5	16	28	50	Y
NSR 23	**Proposed DWF pumping station:**													
	Mechanical screens[1]	2	89	92	142	-20	-51.0	3	3	27.0				
	Submersible pumps[2]	2	85	88	142	-20	-51.0	3	3	23.0				
	Exhaust fan for deodourizer[2] - Northwest facing	1	73	73	142	0	-51.0	3	3	28.0				
	Exhaust fan for ventilation[2] - Northeast facing	1	73	73	142	-10	-51.0	3	3	18.0	31			
	Cumulative Impact with existing pumping stations:													
	Existing Yuen Long Kau Hui No. 2 Sewage Pumping Station[5]	-	-	61	271	0	-56.6	3	3	10.4	10			
	Existing Kau Hui Sewage Pumping Station[5]	-	-	69	236	0	-55.4	3	3	19.6	20			
	Existing Low-flow Pumping Station[5]	-	-	68	177	0	-52.9	0	3	18.1	18	32	50	Y
NSR 24	**Proposed DWF pumping station:**													
	Mechanical screens[1]	2	89	92	160	-20	-52.1	3	3	25.9				
	Submersible pumps[2]	2	85	88	160	-20	-52.1	3	3	21.9				
	Exhaust fan for deodourizer[2] - Northwest facing	1	73	73	160	0	-52.1	3	3	26.9				
	Exhaust fan for ventilation[2] - Northeast facing	1	73	73	160	-10	-52.1	3	3	16.9	30			
	Cumulative Impact with existing pumping stations:													
	Existing Yuen Long Kau Hui No. 2 Sewage Pumping Station[5]	-	-	61	273	0	-56.7	3	3	10.3	10			
	Existing Kau Hui Sewage Pumping Station[5]	-	-	69	238	0	-55.5	3	3	19.5	19			
	Existing Low-flow Pumping Station[5]	-	-	68	179	0	-53.0	0	3	18.0	18	31	55	Y

Notes:

[1] Reference was made to the approved Project Profile for the Proposed Control of Water Pollution at Jordan Valley Box Culvert - Sewage Pumping Station (EIAO Register No. DIR-180/2009) for the SWL of mechanical screen.

[2] Reference was made to the approved Project Profile for the Proposed Pik Shui Sun Tsuen Sewage Pumping Station (EIAO Register No. DIR-218/2011) for the SWL of submersible pump, and exhaust fans for deodourizer and ventilation with acoustic louver/silencer.
As confirmed by DSD and the Project Engineer, the louvers will be located at the northwest and northeast facades of the pumping station only, ie no louver will be installed at the southwest and southeast facades.

[3] Distance between the nearest louvre of the pumping station and the NSR. / Distance between the building boundary of the other existing pumping station and the NSR.

[4] A 20dB(A) reduction due to the enclosed building design; a 10dB(A) reduction due to no direct line of sight from the NSR to the fan.

[5] Reference has been made to the approved Environmental Review Report for Application for Variation of Environmental Permit for Yuen Long Kau Hui No. 2 Sewage Pumping Station (EP No. EP-325/2009A) for the sound power levels due to the existing pumping stations.